Sentryline Terminal End III Non-Release Terminal End

Anchoring for 4 cable barrier system

Training and Product Installation Manual

Please call Australian Construction Products on 02 8708 4400 or visit www.acprod.com.au for more information

February 2017

SMARTER SAFETY SOLUTIONS

ACP

AUSTRALIAN CONSTRUCTION PRODUCTS

Table of contents

ACP may make changes to this Product Manual from time to time. Please check the ACP website prior to using this Product Manual to ensure that you have the latest version.

Sentryline Terminal End III Non-Release Terminal End

Introduction

The **Sentryline Terminal End III** is used to anchor high tensioned 4 cable barrier system. All cables connect to the "non-releasing" ground anchor bracket that is attached to the concrete foundations. A series of **Sentryline II** posts of increasing length taper the cables from the ground up to the required cable height for the Length of Need barrier system.

The **Sentryline Terminal End III** has been designed and tested to meet the evaluation criteria of NCHRP 350 Test Level 3 (TL-3) for a cable barrier system terminal end without releasing the cables from the anchor point. This non-release mechanism allows the system to remain anchored following an impact and reduces the need for immediate maintenance or repair and reducing the hazard to other road users.

The **Sentryline Terminal End III** can be installed with three different forms of concrete anchorage. The system has been designed to prevent damage from any in-ground components during an impact from an errant vehicle, allowing for quick and cost effective repairs. The **Sentryline Terminal End III** can be used to anchor **Sentryline** Cable Barrier Systems on new installs or to retrofit to existing **Sentryline** installations.

Training Outcomes

By the end of the training installers will be able to identify each component of the Sentryline Terminal End III as well as safely installing it as per product specifications and installation manual.

By the end of the training workers will also know the correct PPE, that is required to be worn during installation.

By the end of the training workers will know the correct methods required to handle and install the components of the Sentryline Terminal End III system.

System Overview

The **Sentryline Terminal End III** is designed to provide acceptable structural adequacy, minimal occupant risk and safe trajectory as set forth in NCHRP 350 for cable barrier system terminal ends.

When impacted by an errant vehicle, the cables remain firmly engaged in the ground anchor reducing the need for immediate maintenance or repair. During an end-on impact or when struck from the reverse angle, the vehicle pushes the cables downward and safely traverse over the system. When impacted on the side of the system, the **Sentryline Terminal End III** will redirect the vehicle along the face of the barrier system, bringing it to a controlled stop.

The Length of Need (LoN) of the **Sentryline Terminal End III** is defined as 8m downstream from the non-releasing ground anchor. This is the location along the barrier system at which re-direction occurs and is known as the Point of Need (PoN).

Following an impact with the system, the cables will remain attached to the ground anchor bracket. Repair of the system is completed by replacing any bent or damaged posts.

Limitations and Warnings

The **Sentryline Terminal End III** has been rigorously tested and evaluated per the evaluation criteria in the NCHRP 350 guidelines for gating, re-directive cable barrier system terminal end. The impact conditions recommended in NCHRP 350 are intended to address typical in-service collisions.

The **Sentryline Terminal End III** allows an impacting vehicle to remain on its wheels in a safe and predictable manner under the NCHRP 350 impact conditions. It is imperative that the system is installed as per manufacturers' specification.

Vehicle impacts that vary from the NCHRP 350 impact conditions described for cable barrier system terminal ends may result in significantly different results than those experienced in testing. Vehicle impact characteristics different than, or in excess of, those encountered in NCHRP 350 testing (weight, speed and angle) may result in system performance that may not meet the NCHRP 350 evaluation criteria.

Before Installation

Design, selection and placement of the **Sentryline Terminal End III** shall be in accordance with the Road Controlling Authority's guidelines and the details shown in the construction drawings. Installation shall be in accordance with the installation instructions supplied for this product.

Note: Concrete foundations will have to be designed by a local geotechnical engineer if soil conditions on site do not meet the required level described in the manual.

Depending on the application and circumstances at the site, installation and assembly of the system should take one person less than 20 minutes once the concrete foundation piles are poured and set.

The **Sentryline Terminal End III** is an engineered safety device. Before starting installation ensure familiarity with the makeup of the terminal end.

Safety Statements

General Safety

- All required traffic safety precautions should be complied with. All workers should wear required safety clothing. (Examples, and not limited to, include: high visibility vests, steel capped footwear, gloves etc.)
- Only authorised trained personnel should operate any machinery. Where overhead machinery is used, care must be taken to avoid any overhead hazards.
- Before drilling or excavation always ensure that the area is clear of underground services. (The appropriate service providers may need to be contacted).

Sentryline Terminal End III Safety Statements

- All installers must be well clear of drilling or excavating machinery operating.
- The components are not heavy enough to require specialised lifting equipment, but due to the dimensions and bulky nature, care should be taken when lifting the larger components into position.
- Avoid placing hands or fingers in and around moving machine parts when components are being lifted and manoeuvred into place.

Limited Warranty

Australian Construction Products (ACP) has tested the impact performance of its barrier systems and crash cushion systems, and other highway safety hardware under controlled conditions, however, ACP does not represent nor warrant that the results of those controlled conditions would necessarily avoid injury to persons or property.

ACP EXPRESSLY DISCLAIMS ANY WARRANTY OR LIABILITY FOR CLAIMS ARISING BY REASONS OF DEATH OR PERSONAL INJURY OR DAMAGE TO PROPERTY RESULTING FROM ANY IMPACT, COLLISION OR HARMFUL CONTACT WITH THE PRODUCTS OR NEARBY HAZARDS OR OBJECTS BY ANY VEHICLE, OBJECTS OR PERSONS.

ACP warrants that any product or component part manufactured by ACP will be free from defects in material or workmanship. ACP will replace free of cost any product or component part manufactured by ACP that contains such a defect.

THE FOREGOING WARRANTY IS IN LIEU OF AND EXCLUDES ALL OTHER WARRANTIES NOT EXPRESSLY SET FORTH HEREIN, WHETHER EXPRESS OR IMPLIED BY OPERATION OF LAW OR OTHERWISE, INCLUDING BUT NOT LIMITED TO ANY IMPLIED WARRANTIES OF MERCHANTABILITY OR FITNESS FOR A PARTICULAR PURPOSE. ACP'S LIABILITY UNDER THIS WARRANTY IS EXPRESSLY LIMITED TO REPLACEMENT FREE OF COST OF PARTS SUPPLIED BY ACP ONLY (IN THE FORM AND UNDER THE TERMS ORIGINALLY SHIPPED), OR TO REPAIR OR TO MANUFACTURE BY ACP, PRODUCTS OR PARTS NOT COMPLYING WITH ACP SPECIFICATIONS, OR, AT ACP'S ELECTION, TO THE REPAYMENT OF AN AMOUNT EQUAL TO THE PURCHASE PRICE OF SUCH PRODUCTS OR PARTS, WHETHER SUCH CLAIMS ARE FOR BREACH OF WARRANTY OR NEGLIGENCE. ACP SHALL NOT BE LIABLE FOR ANY INCIDENTAL, CONSEQUENTIAL OR SPECIAL LOSSES, DAMAGES OR EXPENSES OF ANY KIND, INCLUDING, WITHOUT LIMITATION, ANY SUCH LOSSES, DAMAGES OR EXPENSES ARISING DIRECTLY OR INDIRECTLY FROM THE SALE, HANDLING OR USE OF THE PRODUCTS FROM ANY OTHER CAUSE RELATING THERETO, OR FROM PERSONAL INJURY OR LOSS OF PROFIT.

Any claim by the Buyer with reference to Products sold hereunder for any cause shall be deemed waived by the Buyer unless ACP is notified in writing, in the case of defects apparent on visual inspection, within ninety (90) days from the delivery date, or, in the case of defects not apparent on visual inspection, within twelve (12) months from the said delivery date. Products claimed to be defective may be returned prepaid to ACP's plant for inspection in accordance with return shipping instructions that ACP shall furnish to the Buyer forthwith upon receipt of the Buyer's notice of claim. If the claim is established, ACP will reimburse that Buyer for all carriage costs incurred hereunder.

The forgoing warranty benefits shall not apply to (i) any Products that have been subject to improper storage, accident, misuse or unauthorised alterations, or that have not been installed, operated and maintained in accordance with approved procedures and (ii) any components manufactured by the Buyer.

System Design and Design Considerations

Kerbs

As with all road side safety hardware, the **Sentryline Terminal End III** has been designed and tested so that the centre of gravity of the impacting vehicle is at a constant height in relation to the system. For this reason, it is preferred that kerbs or channels are not in front or behind the terminal end as they may result in altering the height of the vehicle at impact. If there is no option but to install near a kerb advice should be followed from the Road Controlling Authority's guidelines.

Flare Rate

The preference is to not flare the **Sentryline Terminal End III** system. If this is unavoidable then the maximum flare rate should be 30:1 over the entire length of the terminal end.

Undulating Ground Conditions

Site specific grading may be necessary to ensure that there are no 'humps' or 'hollows' that may significantly alter the impacting vehicles stability or substantially alter the cable heights in relation to the ground. The non-releasing ground anchor is required to be installed level and centred on the barrier system line.

Care must be taken to ensure all posts in the **Sentryline Terminal End III** are installed to the correct height, alignment and orientation. It is strongly recommended that smoothing of uneven ground conditions be completed along the length of the terminal end.

Clearzone

The **Sentryline Terminal End III** is a gating, non-energy absorbing terminal end and therefore requires a clearzone directly behind as recommended by Road Controlling Authority guidelines.

Vehicles impacting gating end terminals tend to continue through the barrier system possibly impacting fixed objects or other hazards. It is recommended that guidelines for the hazard free area of a gating terminal be followed as stated in AS/NZS 3845.

AS/NZS 3845 requires that a Hazard Free Zone 'immediately behind and beyond the terminal shall be reasonably traversable and free from fixed object hazards. If a clear run-out path is not possible, this area should be similar in character to adjacent unshielded roadside areas.

Tension

The **Sentryline Terminal End III** is designed to anchor 4 high tensioned cable barrier systems. Please refer to the section titled 'Tensioning the Barrier System' for instructions on how to tension the barrier system that is being installed.

Note: Do **NOT** tension a barrier system for seven days after the foundation piles have been cast.

Terminal Posts

The **Sentryline Terminal End III** system comprises of 7 terminal posts of varying lengths. The first post is located 2.0m from the location of the ground anchor bracket. All remaining posts are installed at a spacing of 1.5m.

> Care must be taken to ensure the correct post spacing is ALWAYS used during the installation.

> Care must be taken to ensure the posts are orientated correctly during installation and to ensure the cables do not cross.

> Care must be taken to ensure the line posts are installed at the correct height, as detailed below.

> Allowable system tolerances:

- Longitudinal tolerance of any post +/-50 mm
- Vertical tolerance: +/- 25 mm
- Horizontal tolerance: +/-25 mm
- Verticality in any direction: +/-3 degrees

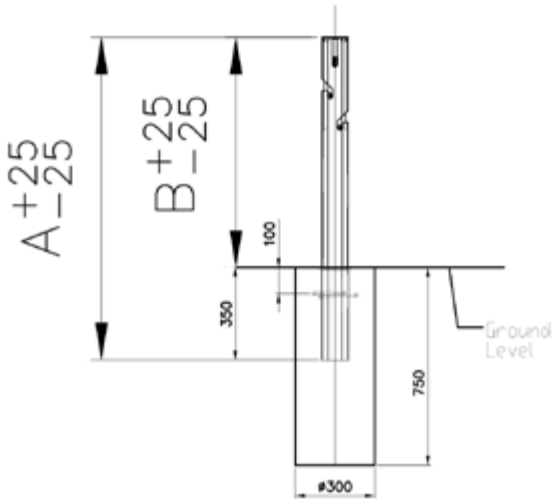

Post List Anchor		
POST NUMBER	"A" POST LENGTH	"B" HEIGHT ABOVE GROUND
1	760	410
2	800	450
3	885	535
4	970	620
5	1050	700
6	1135	785
7	1220	870

Post heights, tolerance ± 25mm

Foundation Options

For the **Sentryline Terminal End III** to provide sufficient anchoring strength to the cable barrier system it relies on the design of the concrete foundation anchor and the surrounding soil conditions on site. Soil conditions can have different characteristics that will affect the strength of the concrete foundations and may interfere with the performance of the system.

The **Sentryline Terminal End III** has been designed to be used with an in-situ concrete rectangular anchorage block. Alternative designs can be used with the approval of the roading authority and local geotechnical engineer. Typical alternative designs include:

- Pile and and pile cap

- Alternative shaped in-situ rectangular block

The selection of the most suitable design option will depend upon the soil type and geometric constraints of the site.

Note: All technical information required to assist in designing a site specific foundation is available from ACP.

IF SOIL CONDITIONS ON SITE DO NOT MEET OR EXCEED THE REQUIRED STRENGTH, SITE SPECIFIC FOUNDATIONS MUST BE DESIGNED BY A LOCAL GEOTECHNICAL ENGINEER.

Length of Need

The length of need (LoN) of the **Sentryline** Cable Barrier System connected to a **Sentryline Terminal End III** system is defined as Post 5 at the transition from the terminal end to the barrier system, 8.0m downstream from the ground anchor bracket.

Note: As per the LoN design section of the Roading Control Authorities guidelines, care must be taken when calculating the actual length of a barrier system required verses the theoretical length of need. The physical placement of the **Sentryline Terminal End III** must be no closer than Post 8 at the beginning of the LoN.

Sentryline Terminal End III - Parts Identification

Reinforcing mesh of Grade 665 or equivalent (SL81 Mesh – 1000 x 900 mm)

Anchor bracket assembly and temporary support frame

Optional items

4 Check Cables
2 Shackles
2 Pins

Wire rope with swaged end fitting and fixings (M24 steel nut, 6mm thick steel round washer)

Line post, sleeve and rebar ring

ALL STEEL COMPONENTS USED IN THE SENTRYLINE TERMINAL END III ARE HOT DIPPED GALVANISED.

Sentryline Terminal End III – Bill of Materials

Sentryline Terminal End III (connected to a 4 cable barrier system)

Bill of Materials - Checklist *Refer to Appendix A for full bill of material listing first	Yes
Terminal End materials	
Reinforcing mesh	
Anchor bracket	
Check cables and attachment shackles	
Wire rope with swaged end fitting and fixings (M24 steel nut, 6mm thick steel round washer)	
Line post, sleeve and rebar ring	
General equipment required	
2 x Support frames (greater than 1m in length each) and strapping (greater than 3m in length) Angle grinder or bolt cutters	
Drilling or excavating machinery suitable for foundation design	
Shovel	
Concrete trowel or float	
String line and pegs	
Measuring tape	
Level	
300mm wrench	
Tension Machine	
Ring Spanner (Size 36)	

Sentryline Terminal End III – Installation Preparation

Getting Started

The **Sentryline Terminal End III** is a cable barrier system terminal end designed to anchor the **Sentryline** 4 cable barrier system. For all installations, whether median or edge of road locations, start from the last post of the cable barrier.

Preparation

Before installing a **Sentryline Terminal End III**, ensure that all components required for the system are on site and have been identified. The **Sentryline Terminal End III** is an engineered safety device. Before starting installation ensure familiarity with the makeup of the system. Refer to the Bill of Materials and Parts Identification sections in this manual for more information.

Ensure that the area where the **Sentryline Terminal End III** is to be installed is sufficiently flat so that the ground anchor and line posts can be installed within the allowable tolerance and the ground anchor can be installed tangentially to the barrier system. Minor site grading may be required.

Soil Conditions

The **Sentryline Terminal End III** ground anchor design contained in this manual has been designed to withstand a constant static load, thermal loading, and dynamic impact load that can be exerted on it from the tensioned barrier cables. It is extremely important that the **Sentryline Terminal End III** has the required strength to anchor the cable barrier system.

It is recommended that soil tests are carried out at the location the **Sentryline Terminal End III** is to be installed.

IF SOIL CONDITIONS ON SITE DO NOT MEET OR EXCEED THE REQUIRED STRENGTH DETAILED IN THIS MANUAL, SITE SPECIFIC FOUNDATIONS MUST BE DESIGNED BY A LOCAL GEOTECHNICAL ENGINEER

Tools Required

The same tools required to install the cable barrier system are used to install the **Sentryline Terminal End III**:

- Drilling or excavating machinery suitable for foundation design
- Shovel
- Concrete trowel or float
- String line and pegs
- Measuring tape
- Level
- Ring spanner
- 300 wrench
- Tension machine

Installation Tolerances

The **Sentryline Terminal End III** is an engineered safety device. To obtain optimal performance it is important to install all components of the system as per the engineer's drawings (see Appendix A and B).

The 7 posts have an installation tolerance of 25mm, as stated within the Terminal Post section (page 8) and shown in Appendix D.

Sentryline Terminal End III – Installation Instructions

Before installing a **Sentryline Terminal End III**, ensure that all components required for the system are on site and have been identified. The **Sentryline Terminal End III** is an engineered safety device made up of relatively small number of parts. Before starting installation ensure that familiarity with the makeup of the system. Refer to the **Bill of Materials** and **Parts Identification** sections in this manual for more information.

Site Preparation

It is preferred that the **Sentryline Terminal End III** is an engineered safety device be installed on flat, level ground. The positioning of the **Sentryline Terminal End III** starts at the last post of the cable barrier system and should be installed in a tangent position to the barrier system. If this is not possible, a maximum flare rate of 30:1 is recommended.

The 7 line posts between the **Sentryline Terminal End III** ground anchor and the cable barrier system must always be at 1.5m spacing. The spacing from the first post of the system to the ground anchor assembly must be 2.0m, as documented in Appendix A.

It is recommended that a string line be used to obtain the correct orientation and placement of the in-ground sockets for the line posts and concrete ground anchor bracket.

BEFORE DRILLING OR EXCAVATION ALWAYS ENSURE THAT THE AREA IS CLEAR OF UNDERGROUND SERVICES

Construction of Anchor Blocks

Sentryline Terminal End III has been designed with an in-situ poured rectangular ground anchor block. Alternative designs are possible with approval from the local roading authority and geotechnical engineer.

Step 1

Excavate the required anchor hole in accordance with Sentryline III drawings. Refer to Sentryline Terminal End III foundation drawings for required dimensions.

The orientation of the excavation is required to be tangential with the line of the barrier system and centred on the centreline of the system. The walls of the excavation shall be vertical or undercut (where possible). All loose spoil should be removed from the excavation.

Step 2

Using a set of bolt cutters or equivalent, clip out sufficient number of grids from the reinforcing mesh to allow it to fit over the anchor bracket. Where possible the opening should not be greater than one grid larger than the size of the anchor bracket when installed.

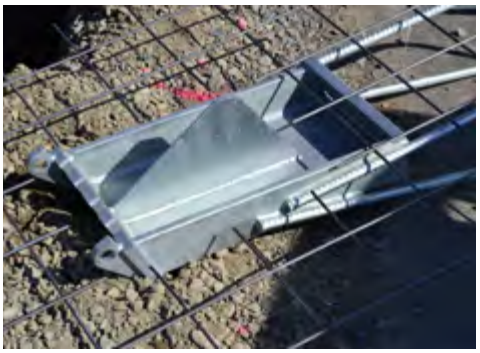

Step 3

Suspend the anchor bracket and reinforcing mesh in the excavated rectangular hole in accordance to Appendix A, using the two temporary support frames and lightweight strapping (as shown in the image below). Strapping of the reinforcing mesh may also be required to suspend it 75mm below ground level.

Once the anchor bracket and reinforcing mesh has been placed in position, the installer needs to cross check that the anchor brackets are aligned with the posts using the string line and the middle of the anchor bracket finger plate (see Appendix B) and the middle of the first post (refer to Appendix A) are exactly 2 meters apart as stated in Appendix A. We also recommend the installer marks the side of the ground (refer to image below) in accordance with the correct position as a visual point of reference should the pouring of wet cement in Step 4 pushes or moves the support frames as shown in the below image.

Step 4

Using 25 MPa structural concrete, fill the excavated rectangular hole and agitate/vibrate to allow even distribution while ensuring the anchor bracket remains in the correct position.

Continue pouring concrete to the top of the levelling bar plate located adjacent to the finger plate.

Step 5

While the cement is wet, trowel around the surface of the anchor bar plate to provide adequate fall away from the wire ropes swaged ends and fittings.

Construction of Post Footings

Step 1

Establish the desired post spacing and alignment in accordance with **Sentryline III Terminal End drawings**. The first post should be 2.0m from the ground anchor bracket, with all remaining posts spaced at 1.5m centres for the length of the terminal end. Care must be taken to keep the post footings tangential to the barrier system and in-line with the ground anchor bracket.

Step 2

Excavate or auger postholes of 300mm diameter to a minimum depth of 750mm.

Ensure all spoil is removed from the excavation.

Step 3

Place a string line from the centre of the ground anchor bracket to the centre of the line posts of the barrier system. The string line should pass over the centre of each post hole excavation.

Step 4

Pour 25 MPa structural concrete to within 50mm from the ground level.

Step 5

Place rebar ring on the recently poured wet cement in alignment with the string line (as shown in the below image). Once the rebar ring is positioned correctly, fill the remaining hole with concrete to be flush with the ground level.

Step 6

Gently move the string line aside while pushing the post sleeve into the wet concrete penetrating the rebar ring. When the string line is released, the string line should be positioned over the middle of the post sleeve.

To ensure the correct vertical placement of the post sleeve, insert the respective post using a level to cross check the sleeve is positioned correctly prior to the concrete curing.

Care must be taken to ensure:

- the post sleeve is positioned within the rebar ring, aligned with the string line and is level with the ground.
- the post are placed in accordance to spacing as shown in Appendix A.
- the height and alignment of each post meets the tolerances stated on Page 8 and in Appendix D.

Step 7

The post sleeve will initially be buoyant in the wet concrete requiring constant pressure to ensure it remains at ground level. For ease, we suggest temporarily placing the post across the sleeve while the wet concrete begins curing. This would generally take 5-10 minutes. Failure to apply appropriate pressure in the early curing stage may result in the socket lifting, as shown in the below image. If the post sleeve lifts during curing stage as shown in the below picture, the hole will need to be dug-out and the process repeated.

Step 8

Place the post covers into the sockets to prevent debris from entering the sockets.

Assembly Sequence

Step 1

It is recommended that that concrete used for the construction of anchor blocks and post footings be cured for a minimum period of seven days prior to completing the assembly sequence.

Step 2

Remove the post covers from the sockets and inspect to ensure the sockets are free of debris. Remove any debris if present.

Step 3

Insert the posts into each socket, ensuring the correct posts are placed in each socket, resulting in a gradual tapering up of the posts from the first post towards the length of need. Ensure the orientation of the posts is consistent with the designer's instructions. Ensure that the beginning of the design LoN is at or downstream from the terminal PoN at Post 5.

Step 4

Note check cables are not required in all states of Australia. Check your state road controlling authority conditions.

If required, install each of the check cables by sliding one loop end over each barrier cable **PRIOR TO SWAGING**. Machine swage the cables as per the procedure described in Step 8 Connecting the Machine Swage Fittings' of the Sentryline II Cable Barrier System installation manual.

Place the first two cables into the outer most slots of the ground anchor bracket and then run these through the central slot of the posts.

Next, place a barrier cable in each of the two inner slots and run these cables through the corresponding side slots on the posts i.e. cable in left hand central slot of bracket runs through the left hand slots on post and cable in right hand in corresponding right slot on post (except for Post 1 which does not contain side slots therefore cables are passed on the outside).

If check cables are installed, attach the free loop end of the check cable to the ground anchor bracket. The two left hand check cables should be attached to the left hand side of the ground anchor via the supplied shackle. Repeat this procedure for the two right hand side check cables to the right side of the ground anchor.

Step 5

a) Post 1 consists of a top slot only with no side slots. The wire rope should be aligned in accordance with all prior posts, with the two lower cables passing around the sides of the post. The central cables should sit directly into the central slot as shown.

b) Ensure all cables are correctly located in the side slots and top slot of the posts. The cables should fit firmly to the bottom of the individual slots, and be located below the barbed details on the side slots.

Step 6

When all the ropes have been installed, fit the plastic caps to the posts, pressing down firmly until the cap sits flush with the top of the posts.

Ensure that the cables in the side slots of the posts have been captured behind the fingers of the plastic caps.

Step 7

Tension the barrier system, as per the requirements noted in the section titled ‘Tensioning the Barrier System’.

Tensioning the Barrier System

Tensioning the barrier system is achieved by pulling the swage fittings attached to the ends of the cable together using a hydraulic machine. The swage fittings can then be secured to the strong back bracket which will hold the tensioned cables together when the machine is released.

ENSURE FULL TENSION MACHINE TRAINING, INCLUDING SAFE USE, HAS BEEN COMPLETED BEFORE OPERATING A TENSION MACHINE

Tension Machine and associated training is available from your local ACP sales office.

Place swage fittings and strong back bracket into the tension machine ensuring that the cable is held by the safety catches. Once all personnel's hands are clear activate the machine so that it contracts and pulls the swage fitting together. (shown in Figure 1.0-1.1)

Figure 1.0

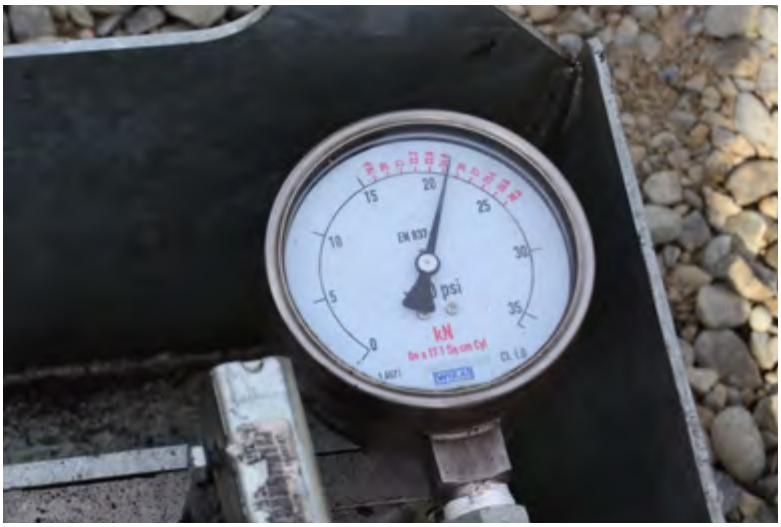

Figure 1.1

Note: The tension machine is pre-set to stop at tension; therefore it may be necessary to adjust the settings on the machine. Refer to **Tension** in the **System Design** section in the **Sentryline II** cable barrier system manual or contact ACP for more information.

Run nuts along the threaded section of the swage fittings inside the strong back bracket using a ring spanner until secure. (shown in Figure 1.2)

Figure 1.2

Activate the tension machine so it extends and the machine can be lifted from the cable.

Repeat the above process until all the cables are tensioned.

KEEP HANDS AND FINGERS CLEAR OF MOVING COMPONENTS

De-tensioning the Barrier System

The barrier system can be de-tensioned simply reversing the above procedures as outlined above.

Place tension machine on the cable ensuring that safety catches are in place. Contract the machine slightly which will release the tension on the nuts against the strong back bracket. Using a ring spanner remove the nuts from the swage fitting thread. Expand the machine so the tension is released from the cable and remove the tension machine.

Inspection and Maintenance Frequency

The **Sentryline Terminal End III** is maintenance free. However it is recommended that all cable barrier systems are checked after impacts to ensure that the tension is maintained. Refer to Installation Instructions and the Tensioning section in this manual for more information.

Maintenance requirement for repair after a Bushfire

Following a sever bushfire a detailed inspection of the Sentryline Terminal End III should be undertaken. If heat damage is noted on the line posts, it is recommended that they be replaced in addition to the plastic caps.

A detailed inspection should be completed on the ground anchor bracket, end swags of the cables and the cables. Refer to the **Sentryline II** cable barrier system Product Manual or contact ACP for recommendations on inspections for the cable barrier system itself.

Installation Checklist for the Sentryline Terminal End III

General	Y	N
The ground anchor bracket must be level and located along the centreline of the terminal end posts and barrier system.		
The ground anchor block should be tangential to the barrier system.		
The first terminal post should be located 2.0m from the ground anchor bracket. All remaining posts should be spaced at 1.5m centres.		
Ensure line post sockets are free of debris prior to installing the posts.		
Ensure the terminal posts are installed into the correct sockets, forming a gradual taper from the first post to the last.		
Ensure the line posts orientated the correct direction and consistent with the posts in the barrier system LON.		
Connected to a 4 Cable Barrier System		
The **two top cables** of the cable barrier system are positioned in the outer two slots of the ground anchor bracket.		
The **two bottom cables** are positioned in the central two slots of the ground anchor bracket.		

Comments:

Location:			
Installed by:		Date:	
Inspected by:		Date:	

Frequently Asked Questions

1. What type of equipment is required to install the Sentryline Terminal End III?

Standard tools required include a wrench, measuring tape, string line and trowel. Machinery suitable for drilling or excavating the foundations.

2. How much concrete is required to install the concrete foundations on a Sentryline Terminal End III and what strength does it need to be?

The theoretical volume of concrete required for the in-situ rectangular concrete anchor block and 7 line post footing is 4.1 m3.

Due to the potential for over excavation and removal of spoil the actual volume required may be large than this. It is recommended that measurements on site are undertaken before concrete is ordered.

Note: Other foundation sizes and types might be required due to on site soil conditions. Concrete volume requirements will vary accordingly.

3. Is there a curing period for the concrete before the cable barrier system can be tensioned?

Yes, it is recommended that you do not tension until at least seven days after the concrete footings have been poured.

4. Does your company provide spare parts? What is the lead-time for supply?

It is important to fix a damaged cable barrier system as soon possible because it most probably won't perform as designed when damaged. For this reason it is recommended that spares are held by maintenance contractors. (The concrete footings and ground strut assembly are very unlikely to be damaged in a design level impact).

5. On average, how long does it take to install a Sentryline Terminal End III?

Depending on circumstances at the site, installation and assembly of the system should take one person crew less than 20mins once the concrete foundations are poured and set.

6. What about vandalism, can the Sentryline Terminal End III be easily damaged?

No, once the system has been tensioned it is an extremely rigid system and tampering without the use of heavy duty tools or machinery is very unlikely to damage or affect the performance of the system.

7. How easily can the Sentryline Terminal End III and Sentryline III Cable Barrier System be restored after impact?

Sentryline Terminal End III is easily repaired following an impact. Damaged line posts can be removed using a crow bar and new ones positioned in the sockets before the cables and caps are repositioned. It is recommended that the cable tension is checked after impact.

If the system has been de-tensioned, a hydraulic tension machine and trained personnel will be required to re-tension the system.

8. What maintenance does the Sentryline Terminal End III require?

The Sentryline Terminal End III is maintenance free. However it is recommended that all cable barrier systems are checked after impacts to ensure that the tension is maintained. Refer to Installation Instructions and the Tensioning section in this manual for more information.

Appendices

Appendix A - Non-Releasing Anchor

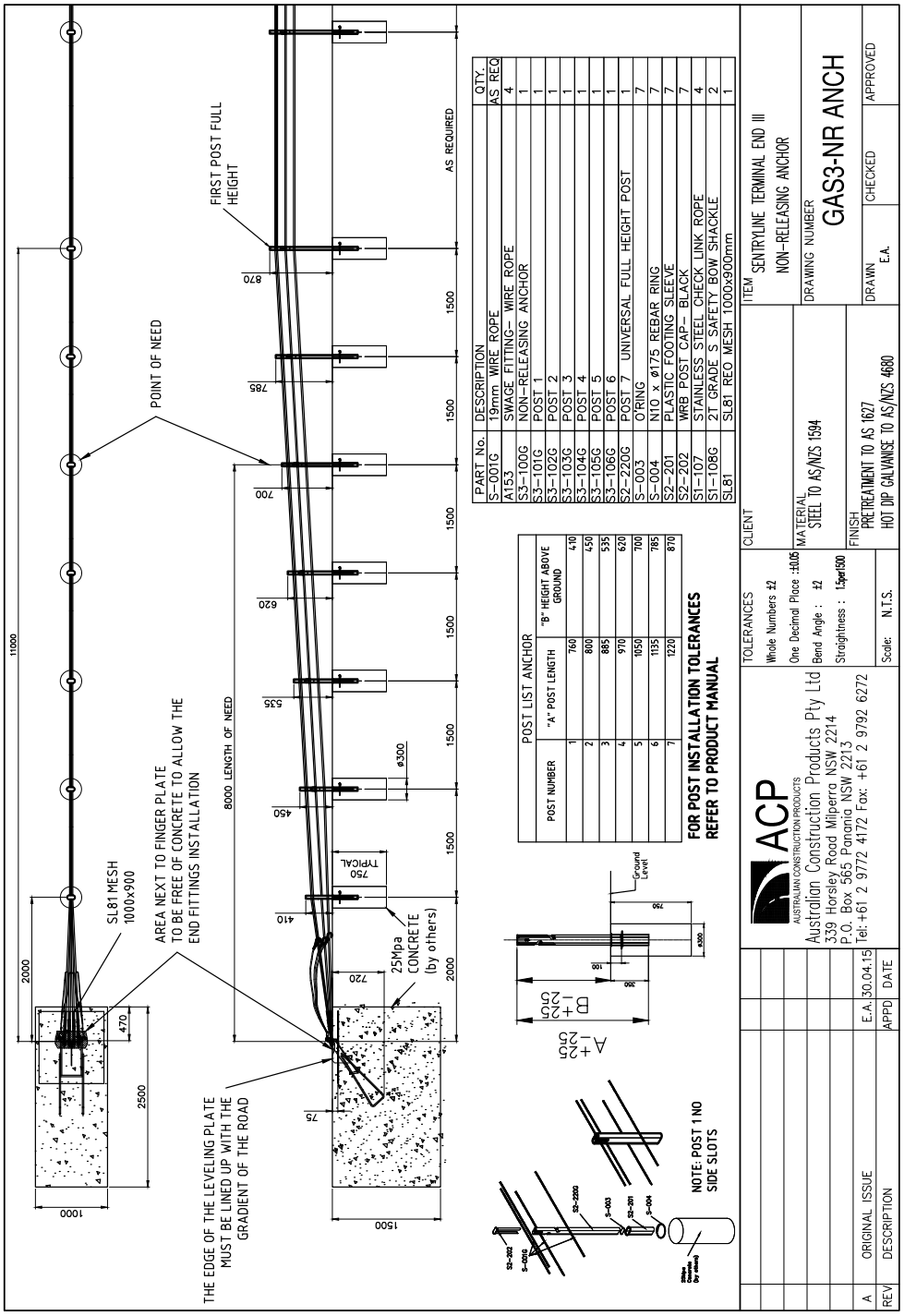

Appendix B - Non-Releasing Anchor (without safety check ropes)

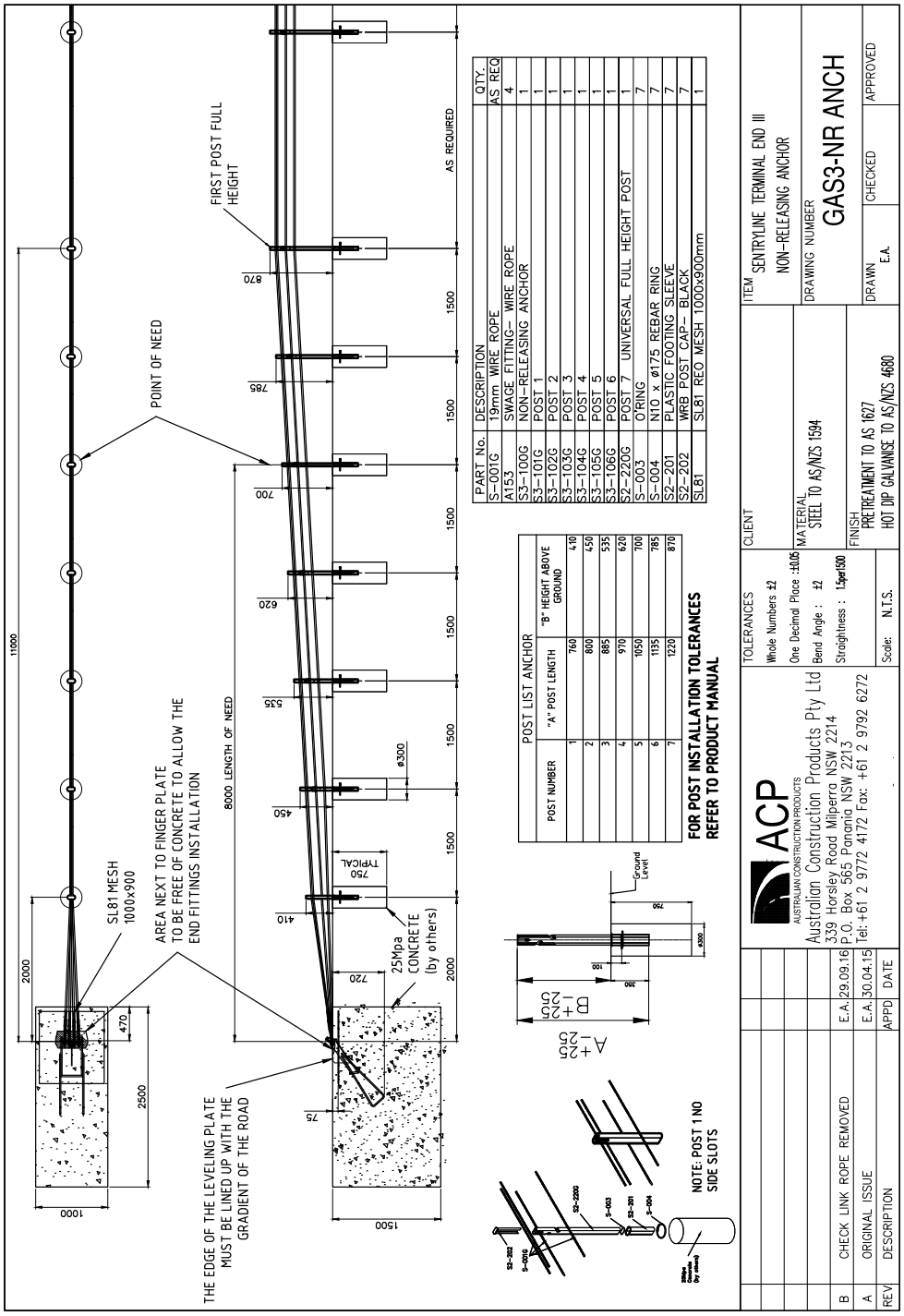

PART No.	DESCRIPTION	QTY.
S-001G	19mm WIRE ROPE	AS REQ
A153	SWAGE FITTING- WIRE ROPE	4
S3-100G	NON-RELEASING ANCHOR	1
S3-101G	POST 1	1
S3-102G	POST 2	1
S3-103G	POST 3	1
S3-104G	POST 4	1
S3-105G	POST 5	1
S3-106G	POST 6	1
S2-220G	POST 7 UNIVERSAL FULL HEIGHT POST	1
S-003	O'RING	7
S-004	N10 x ø175 REBAR RING	7
S2-201	PLASTIC FOOTING SLEEVE	7
S2-202	WRB POST CAP- BLACK	7
SL81	SL81 REO MESH 1000x900mm	1

POST LIST ANCHOR		
POST NUMBER	"A" POST LENGTH	"B" HEIGHT ABOVE GROUND
1	760	410
2	800	450
3	885	535
4	970	620
5	1050	700
6	1135	785
7	1220	870

Appendix B - Rectangular In-Situ Concrete Block

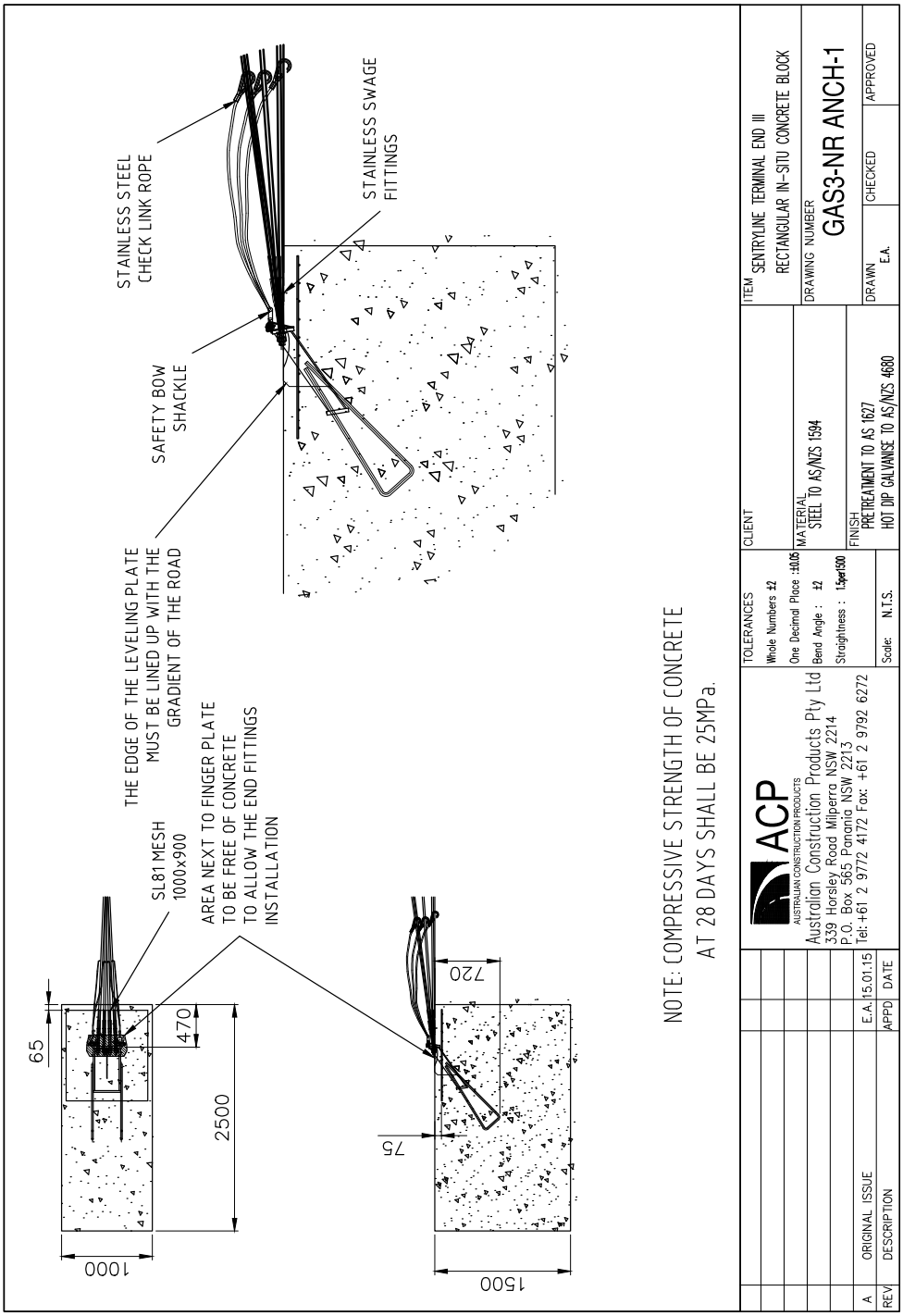

Appendix C - Anchor Bracket

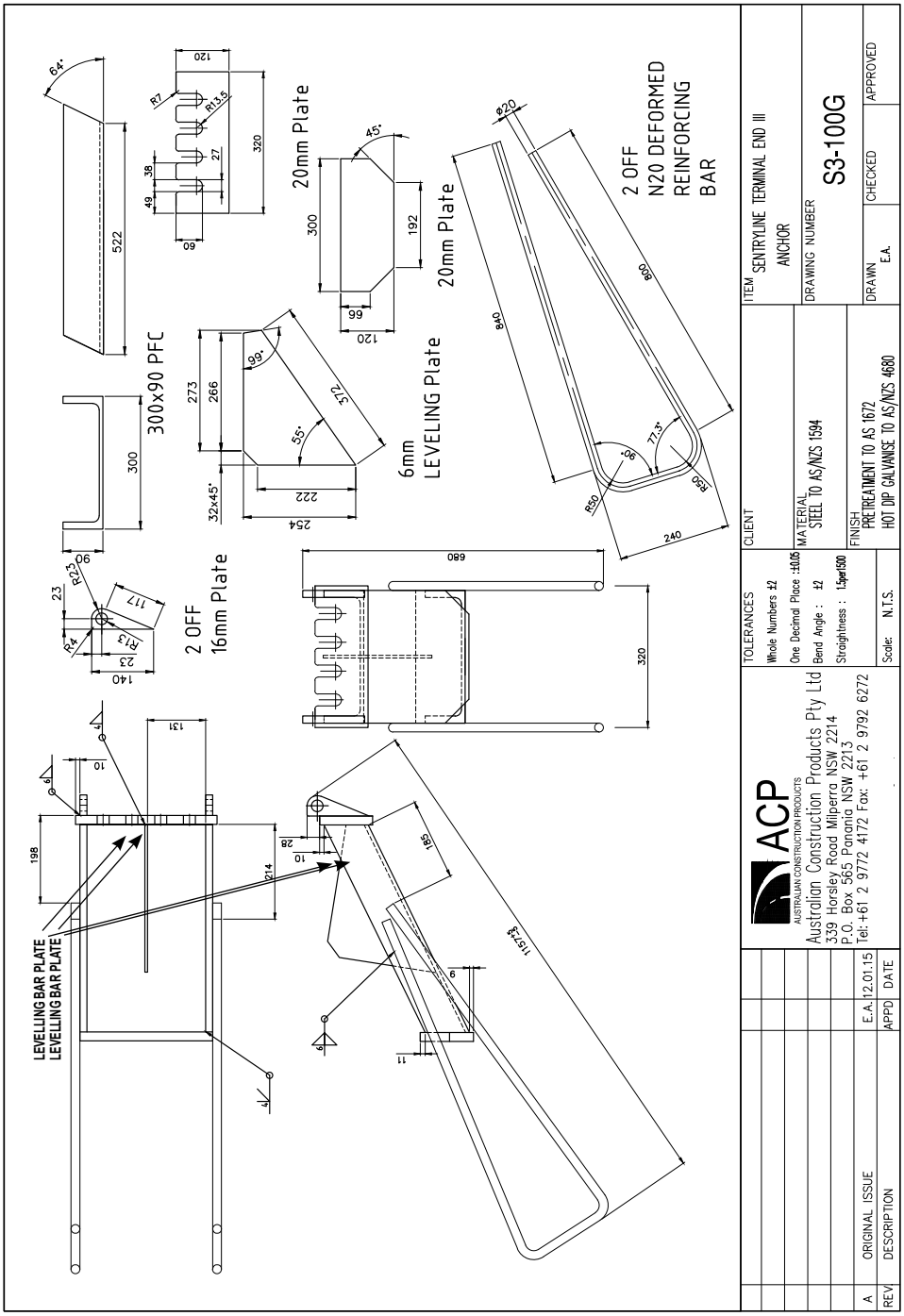

Appendix D - Catch Cable Components

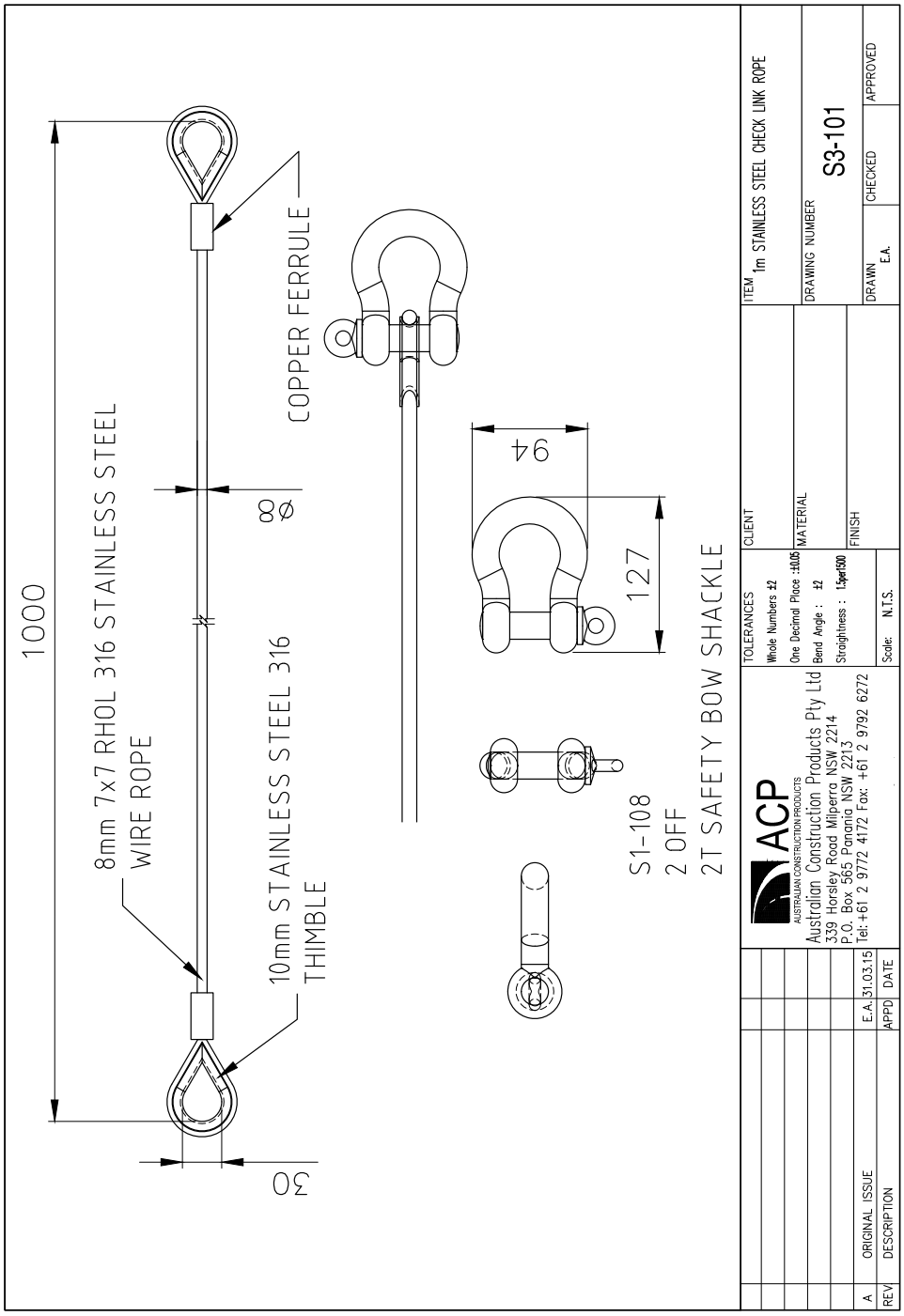

Safety Barrier System Conditions

SENTRYLINE II 4 Wire Rope Barrier System - Permanent

The conditions for use of the SENTRYLINE II 4 Wire Rope Barrier System - Permanent on the New South Wales classified road network, are shown in the attached *Safety Barrier System Conditions*.

The conditions are based on the determination of the Austroads Safety Barrier Assessment Panel.

The Safety Barrier System Conditions should be read in conjunction with the Roads and Maritime Specification R132 - Safety Barrier Systems.

Product & Installation Manual: Sentryline III Non-Release Terminal End

Safety Barrier System Conditions

Austroads

SENTRYLINE II 4 Wire Rope Barrier System - Permanent


Australian Distributor	Australian Construction Products Pty Ltd
New Zealand Distributor	CSP Pacific (Armorwire)
Date Issued	2 May 2016

Status	**Accepted** – May be used on the classified road network. These acceptance conditions take precedence over any instructions in the Product Manual.
Product accepted	• SENTRYLINE II 4 Wire Rope Barrier System - Permanent consisting of 4 wire ropes supported in notches in flat sided, hollow, oval section posts with one rope either side of the post and 2 ropes in the central slot. Posts set into a plastic sleeve in a concrete footing. Rope tension is 25 kN. • Colour of posts to be determined by local Road Agency. Variants • Nil.
Product Manual reviewed	Dated December 2013 (barrier) August 2015 (terminal).
Variants NOT accepted	• End fittings using mechanical swaging. • Wire rope cables held to a trigger strut that is NOT bolted to the ground strut. • Variants that are not on the list above are not accepted. • Variants accepted in other jurisdictions, but not accepted in the local jurisdiction, are NOT permitted.

Speed limit (km/h)	Tested at 100 km/h. May be used in 110 km/h speed zones (permanent installation only).	
Tested containment	NCHRP 350 Test Level 4 (8,000 kg at 80 km/h and 15°).	
Tested dynamic deflection	100 km/h	1.6 metres.
	Note that deflections are measured in crash tests performed under controlled conditions. Designers should be aware that the deflection figures published as a test result may not be the deflection values achieved in the field for all impacts by errant vehicles dependent upon foundation conditions and roadside geometry.	
Point of need	At leading end – 8 metres downstream from the end of terminal.	
Development length	Not applicable.	
Minimum length of barrier between terminals	114 metres.	
System width (m)	• 0.3 metres at post • 0.4 metres at terminal	

System conditions	1. Anchor spacing greater than 1,000 metres is NOT permitted. 2. Installation on top of a kerb is not recommended, however if installed on top of a kerb, all system components must be free to operate.	
Terminals and connections	W-Beam guardrail	Not permitted.

Safety Barrier System Conditions: SENTRYLINE II 4 Wire Rope Barrier System - Permanent

	Thrie-Beam guardrail	Not permitted.
	Type F Concrete Safety Barrier	Not permitted.
	Proprietary product	1. SENTRYLINE TERMINAL END III WIRE ROPE TERMINAL SYSTEM - PERMANENT • Permitted for use with SENTRYLINE II 4 Wire Rope Barrier System - Permanent. • Permitted as a terminal on a flare. • This is a gating terminal.
	Other	A terminal must be fitted to both ends of the barrier.
Gore area use	Permitted.	
Pedestrian area use	Permitted. – consider potential for snagging and deflection.	
Cycleway use	Permitted. – consider potential for snagging and deflection.	
Frequent impact likely	Not permitted.	
Remote location	Not permitted.	
Median use	Permitted.	
Flare **(See Explanation of Terms diagram)**	Refer to Austroads Guide to Road Design Part 6: Roadside Design, Safety and Barriers Table 6.5 for design advice.	
Offset to travel lane (m)	Refer to Austroads Guide to Road Design Part 6: Roadside Design, Safety and Barriers, Section 6.3.5.	
Hazard free area beside barrier or terminal **(Working Width)**	Refer to Austroads Guide to Road Design Part 6: Roadside Design, Safety and Barriers, Section 6.3.16.	

Installation	The SENTRYLINE II 4 Wire Rope Barrier System - Permanent must be installed and maintained in accordance with the Product Manual and Road Agency specifications. The Road Agency specifications and standards shall have precedence.	
Minimum distance to excavation	1.6 metres minimum distance between the edge of the barrier and the edge of an excavation. (Being the largest adopted dynamic deflection).	
Slope limit	Side slope limit: 10 Horizontal to 1 Vertical (10%).	
Foundation pavement conditions	Concrete	Permitted with coring holes.
	Deep lift Asphaltic Concrete	Permitted with coring holes.
	Asphaltic concrete over granular pavement	Permitted.
	Flush seal over granular pavement	Permitted.
	Unsealed compacted formation	Permitted.
	Natural surface	Permitted.
	Foundation pavement conditions must be smooth and free of snag points, kerbs or obstructions that may interfere with the operation of the product.	
Attachments and screens	In accordance with the requirements of Australian/New Zealand Standard AS/NZS 3845, road furniture such as headlight screens, signs, lighting posts and fences for pedestrians, visual screens, debris screens, platforms for workers and other non-product hardware must not be attached to the product.	

Safety Barrier System Conditions: SENTRYLINE II 4 Wire Rope Barrier System - Permanent

	Screens may be placed adjacent to the side of the product not exposed to traffic. The distance between the screen and the product shall be determined by a site specific risk assessment that considers the deflection distance. Screens must not have horizontal members that present a risk of impaling errant vehicles that impact the product.
Damaged components	Damaged components must be replaced. Repaired components must not be used.
Delineation	The installed system shall include delineation as prescribed by Road Agency specifications and drawings.
Traceability and markings	Product markings shall be in accordance with marking/s prescribed by the current Australian/New Zealand Standard AS/NZS 3845 Road Safety Barrier Systems and Road Agency specifications. Traceability details that must be permanently fixed to the ["terminal" or "product"] are: • Name of the product. • Manufacturer or distributor name. • Date of manufacture. • Model or version details of the product, if applicable. • Batch number, if applicable. • Serial number, if applicable. Traceability details must be easily visible but unobtrusive and not be in a form that becomes prominent advertising. No advertising shall be displayed on the installation. Traceability must be in a form that will not be erased with use.

Notes	Conditions are based on drawings in the Product Manual supplied by the Proponent, dated December 2013 and August 2015. This acceptance will cease if there is any change in the product design or specifications.
	Only the Product Manual authorised by the Proponent shall be used in any marketing of the product.
	Acceptance of the SENTRYLINE II 4 Wire Rope Barrier System - Permanent does not place any obligation on the Road Agency, or its contractors, to purchase or use the product.
	The Austroads Safety Barrier Assessment Panel may periodically re-assess the SENTRYLINE II 4 Wire Rope Barrier System - Permanent. The Road Agency may withdraw or modify at any time, the acceptance status or conditions of use of the product without notice. Users should refer to the Road Agency web site to ensure they have the latest version of the conditions related to this product.

Product & Installation Manual: Sentryline III Non-Release Terminal End

Safety Barrier System Conditions: SENTRYLINE II 4 Wire Rope Barrier System - Permanent

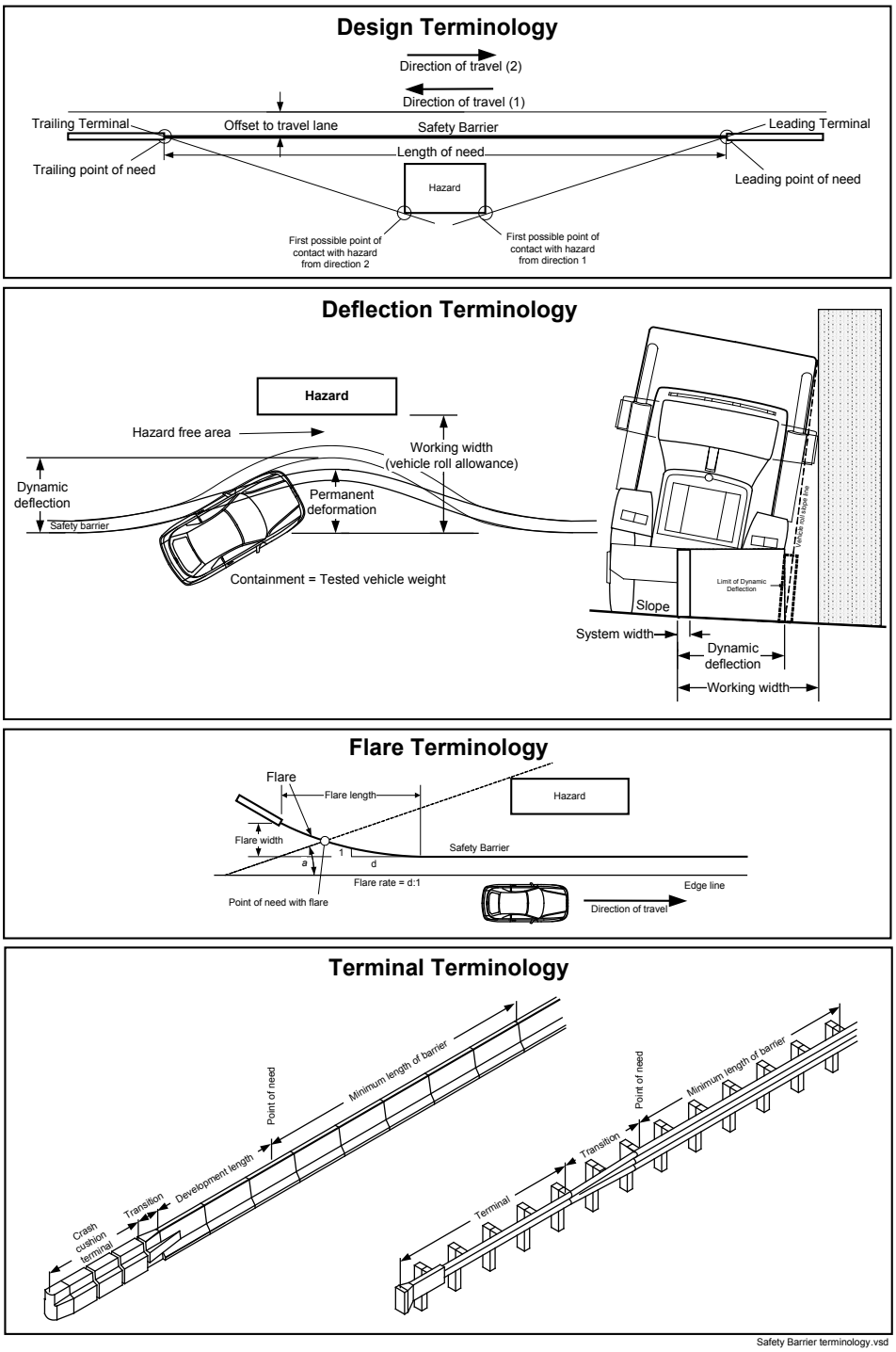

For more information, refer to
Austroads Guide to Road Design Part 6: Roadside Design, Safety and Barriers