TAU-II™

Crash Cushion

Product & Installation Manual

Please call Australian Construction Products on 1800 724 172 or visit www.acprod.co.au for more information

October 2015

SMARTER SAFETY SOLUTIONS

ACP

AUSTRALIAN CONSTRUCTION PRODUCTS

Table of contents

Preface 4
Introduction 4
Important Information 4
System Overview 4
Limitations and Warnings 5
Required Tools 5
Parts Identification 6 - 7

Parallel System Installation

Preparing for installation 8
Step 1. Backstop Installation 10
Step 2. Rear Cable Anchor Installation 11
Step 3. Front Cable Anchor Installation 12
Step 4. Install Diaphragms 13
Step 5. Install Guide Cables 14
Step 6. Attach Pipe Panel Mounts 16
Step 7. Install Side Panels 17
Step 8. Assemble Nose Assembly 20
Step 9. Install Energy Absorbing Cartridge 22
Step 10. Tension Guide Cables 23
Step 11. Final Inspection 23

Tapered System Installation

Introduction 24
System Overview 25
Step 1. Foundation Requirements 25
Step 2. Anchoring System 27

Step 3. Assemble Bulkheads 29
The Front Support 30
Middle Assembly 31
Step 4. Backstop Assemblies 35
Compact Backstop 36
Flush Mount Backstop 37
Wide Flange Backstop 38
Step 5. Attach Side Panels 40
Step 6. Attach Nose Piece 41
Step 7. Install Cables / Guides 42
Step 8. Stretch and Align System 44
Step 9. Tension Cables / Torque Sliders bolts 44
Step 10. Install Lateral Support Cables 45
Step 11. Insert Energy Absorbing Cartridges 47
Step 12. Final Inspection 48

Appendix

A. System Configuration Chart 49
B. System Torque Chart 51
C. System Foundation Drawings 52
D. System Transition Drawings 65
E. Installation Instructions to Barrier Guard 800 Steel Barrier 78

Preface

ACP's TAU-II® is a fully re-directive, non-gating, re-usable crash cushion.

As with any roadside safety device, the TAU-II® system must be installed properly to insure proper performance. Thoroughly review and fully understand the installation instructions and product limitations before starting the installation. Watch and fully understand the TAU-II® Installation and Assembly Video before attempting to install this crash cushion. Do not start the installation without the proper plans and tools required for installation.

If you require additional information, or have questions about the TAU-II® Crash Cushion, please call ACP on 02 8708 4400 or go to www.acprod.com.au

Introduction

The TAU-II® system has been tested to meet the rigorous requirements of NCHRP Report 350, Test Levels 2 and 3. The systems will be provided in lengths and capacities for both low speed and high speed applications.

The TAU-II® system is fully redirective and non-gating, and is ideally suited for narrow hazards such as the ends of rigid barriers, tollbooths, utility poles and more. Ease of installation, numerous transition options, low maintenance requirements, and reusability of system components make the TAU-II® system ideal for treating many roadside hazards.

Redirective, non-gating crash cushions are highway safety devices whose primary function is to improve the safety for occupants of errant vehicles that impact the end of rigid or semi-rigid barriers or fixed roadside hazards by absorbing the kinetic energy of impact or by allowing controlled redirection of the vehicle. These devices are designed to safely decelerate an errant vehicle to a safe stop or redirect an errant vehicle away from roadside or median hazards. These types of systems are typically applied to locations where head-on and angled impacts are likely to occur and it is desirable to have the majority of post impact trajectories on the impact side of the system.

Placement and use of the TAU-II® system should be accomplished in accordance with the local road authority guidelines.

Important Information

The TAU-II® crash cushion must be installed properly to maximise the systems ability to protect errant motorists that impact the system. Designers, installers and people that maintain the system should thoroughly understand the manufacturer's instructions prior to performing the necessary work. Key information is provided in this Design Manual and important additional information is in the Installation Manual and Maintenance Instructions. If these documents are not available or if there are any questions regarding the proper placement, installation or maintenance of the TAU-II® crash cushion, contact **ACP on 02 8708 4400 or go to www.acprod.com.au**

System Overview

The TAU-II® system is designed and constructed to provide acceptable structural adequacy, minimal occupant risk and safe vehicle trajectory as set forth in NCHRP 350 for redirective, non-gating, crash cushions. Refer to Figure 1 to familiarise yourself with the basic parts and part names of the system.

Product & Installation: TAU-II™ Crash Cushion

The TAU-II® system is designed to shield the ends of median barriers and other narrow fixed objects likely to be struck head-on, by absorbing and dissipating the kinetic energy of impacting vehicles. TAU-II® utilises disposable Energy Absorbing Cartridges (EACs) to absorb the kinetic energy of the impacting vehicle. The EACs are separated by diaphragms and held in place with a framework of Thriebeam corrugated steel rail panels that "telescope" rearward during head-on impacts. As the vehicle compresses the cushion, it exerts a force on the first bay containing an EAC.

The diaphragms distribute the impact forces uniformly to all the remaining cartridges in each bay until the vehicle eventually stops. The depth of penetration is dependent upon both the original impact speed and the mass of the impacting vehicle. Only the Energy Absorbing Cartridges are expended after most head-on impacts. When hit at an angle along the side, the system is restrained laterally by guidance cables that run the length of the system, attaching to the bottoms of the diaphragms, and terminate at the anchors at each end of the system. The front and rear cable anchors are bolted to a foundation.

Limitations and Warnings

The TAU-II® system has been rigorously tested and evaluated per the recommendations in the NCHRP Report 350 Guidelines for terminals and crash cushions. The impact conditions recommended in NCHRP 350 are intended to address typical in-service collisions. When properly installed and maintained, the system is capable of stopping or containing and redirecting impacting vehicles in a predictable and safe manner under the NCHRP 350 impact conditions.

Vehicle impacts that vary from the NCHRP 350 impact conditions described for redirective, non-gating, crash cushions may result in significantly different results than those experienced in testing. Vehicle impact characteristics different than or in excess of those encountered in NCHRP 350 testing (speed and angle) may result in system performance that may not meet the NCHRP 350 evaluation criteria.

For additional information on the TAU-II® System please call ACP on 02 8708 4400 or email www.acprod.com.au

Provided Tools

- Long bolt for nested slider panel installation
- Allen socket for the slider bolt assembly
- Cable socket

Required Tools

- 12mm drive deep sockets: 19mm, 20 mm, 24mm, 30mm, 20mm deep socket
- 19mm combination end wrench
- 12mm drive ratchet with extensions
- Rotohammer for drilling holes in concrete: 22mm X 250mm bit for chemical anchors
- Torque wrenchs: · 27 N-m and 680 N-m capacity
- Measuring tape
- Safety Equipment: Glasses, Gloves
- 12mm Air impact wrench (Optional)

Note: The tools list is a general recommendation. Depending on the specific characteristics of the job site, more or less tools may be necessary.

Parts Identification

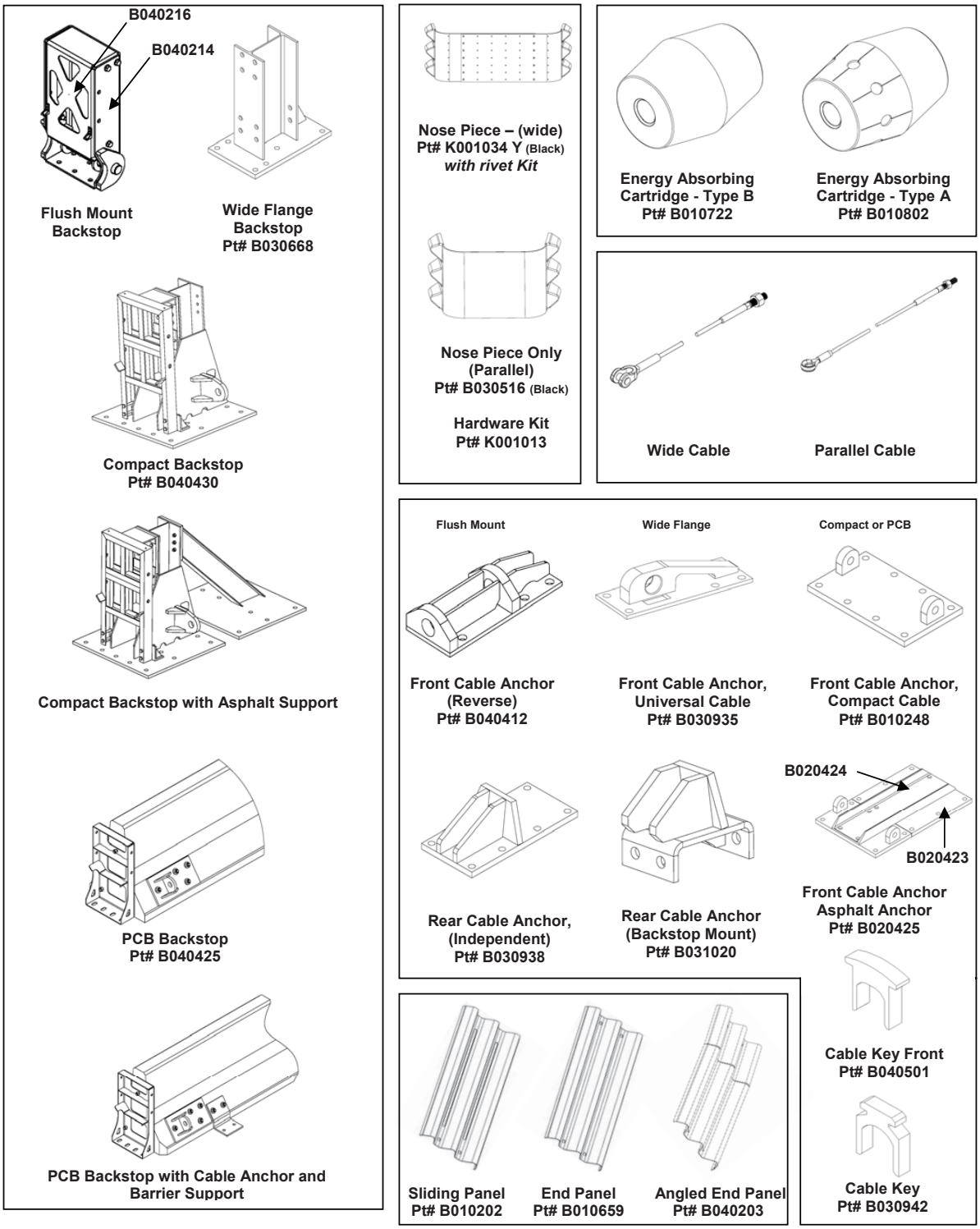

Figure 1. Illustrated parts list

Product & Installation: TAU-II™ Crash Cushion

Parts Identification

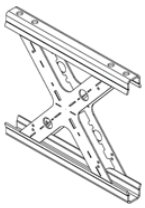
XL Bulkhead
Pt# B030521

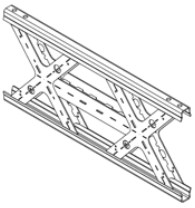
XXL Bulkhead
Pt# B030528

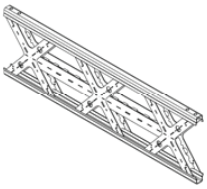
XXXL Bulkhead
Pt# B030529

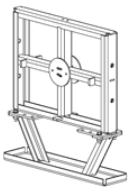
Middle Support
Pt# B030703

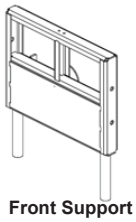
Front Support
Pt# B030704

Leg Kit Pt# K001005

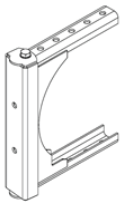
Wing Assembly
Pt# B030509

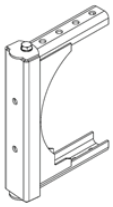
Transition Wing Assy.
Pt# B030910

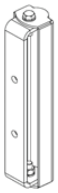
36 Inch Adapter Assy
Pt# B031201

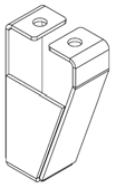
Leg (wide)
Pt# B030425

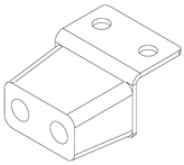
Bumper Assembly
(wide)
Pt# B031035

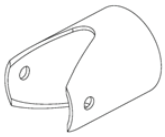
Pipe Panel Mount
Pt# B010651

Hardware Kit
Pt# K001017


Backstop Blockout
(wide)
Pt# B030713

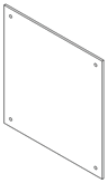
Front Collision Plate
(wide)
Pt# B030801

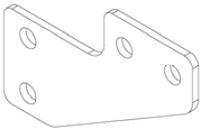
Wing Brace
(wide)
Pt# B030821

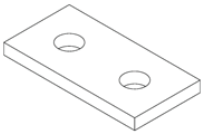
Spacer - Wing Brace
(wide)
Pt# B030823

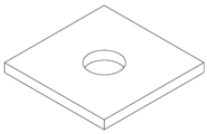
Level Spacer
Pt# B030551

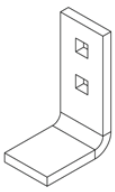
EAC Locator Kit (X4)
Pt# K001028

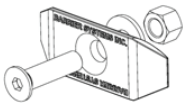
Slider Assembly Kit (x4)
Pt# K001003

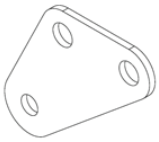
Leg Adapter
(wide)
Pt# A040223

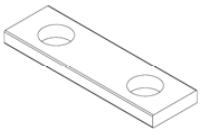
Backing Plate
(wide)
Pt# B030543

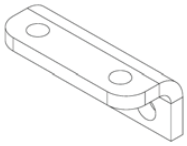
Lateral support Mount,
(Backstop Mount - wide)
Pt# B031011


Lateral Support
Cable Assembly Kit
Pt# K001031

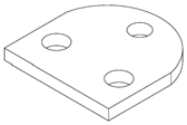
Bulkhead Mount,
Lateral Support – (wide)
Pt# B031010

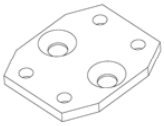
Cable Guide Mounting
Plate – (wide)
Pt# B030411

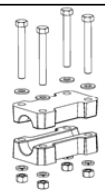
Cable Guide Assembly
Kit (x4)
Pt# K001004

Preparing for Installation – Parallel System

Depending on the size of the system ordered, the parts will be shipped on two to five pallets. Assembly of the TAU-II® system is typically done at the worksite. (If preferred, the system can be assembled "off-site" and set into position as one piece, with a forklift or crane.) Before beginning the assembly of the TAU-II® system, check the packing list to be certain that all of the system components were included in the shipment.

The TAU-II® Crash Cushion system has been designed to attach to concrete. CSP Pacific recommends that at a minimum, the system be anchored to standard six-inch reinforced 28 MPa Portland Cement Concrete (PCC) pad or roadway. When installing to concrete, care must be taken when building the concrete pad to space the rebar so as to minimise interference with the anchor bolt holes. **(See Appendix "C", Page 52, for recommended foundation options and material specifications.)**

NOTE: It is important to determine the system's installation position and angle, to optimise proper function and transition.

This system is available in two configurations:

> The system can be attached directly to the end of a concrete barrier, utilising the "PCB Backstop" (BSI part # B040425) or the "Flush Mount Backstop" (part # B040219).

> The second configuration utilises a "Compact Backstop" (part # B010537) which is a free standing back support.

This manual describes the installation procedure for an 8 bay (Test Level 3) system.

(See the System Configuration Chart in Appendix "A", Page 49, for guidelines on choosing a system length to accommodate different traffic criteria.)

Concrete pad in front of hazard

Whole system on pallets for shipment

Product & Installation: TAU-II™ Crash Cushion

Depending on the installation design, transition hardware may be necessary. Because each transition is unique, CSP Pacific recommends that the transition hardware be properly fitted before anchoring the system. Pre-assemble the transition hardware before setting the system base plates to assure the proper spacing between the system and the object being treated. **(See Appendix "D", Page 65, for some recommended transition types)**.

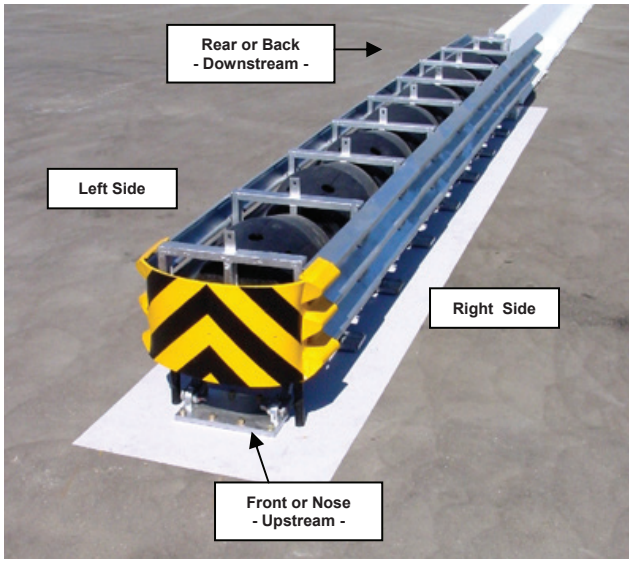

Sign Conventions

The picture of the TAU-II® systems is labelled to show the descriptive terms that will be used throughout this manual.

Concrete Pad Installation – Parallel System

Step 1. Compact Backstop to Concrete Foundation

Place the Compact Backstop in the desired final installation position. Use the holes in the base plate as a template to mark the location of the anchor points. Remove the backstop and drill the anchor bolt holes. The holes should be 150mm deep and 22mm diameter. Install the anchors into the pad following the instructions included with the anchor epoxy. When the epoxy is fully cured, install the nuts and flat washers. Tighten to 160N-m.

Use the Base Plate of the Compact Backstop as a Template

Step 1. PCB Backstop to Concrete Foundation

Place the PCB Backstop in the desired final installation position. Use the holes in the backstop as a template to mark the location of the anchor points. The holes should be 150mm deep and 22mm diameter. Use a caulking gun and gun insert filled with anchoring compound to secure the 20mm x 260mm galvanised anchors. Torque to 160N-m.

Use the PCB Backstop as a template to drill the holes

Step 2. Concrete Rear Cable Anchors

NOTE: If you are using the compact Backstop, skip to Step 3.

Use the holes in the plate as a template to mark the location of the holes for the anchor studs. (There is one Cable Anchor for each side of the P.C.B.). The holes should be drilled 150mm deep and 22mm in diameter. Install the (all thread) studs into the PCB following the instructions included with the anchor epoxy. When the epoxy is fully cured, install the nuts and flat washers. Tighten to 160 N-m.

NOTE: For proper system performance, the concrete barrier must be rigidly attached to an adequate foundation. See Appendix C for the Anchor Foundation Options and page 26 for anchoring material options.

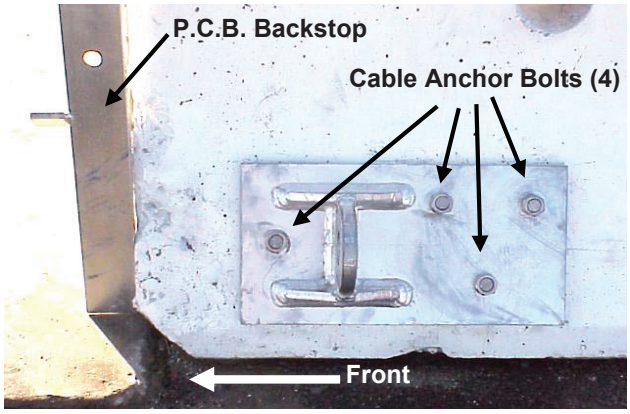

Use the Base Plate of the Compact Backstop as a Template

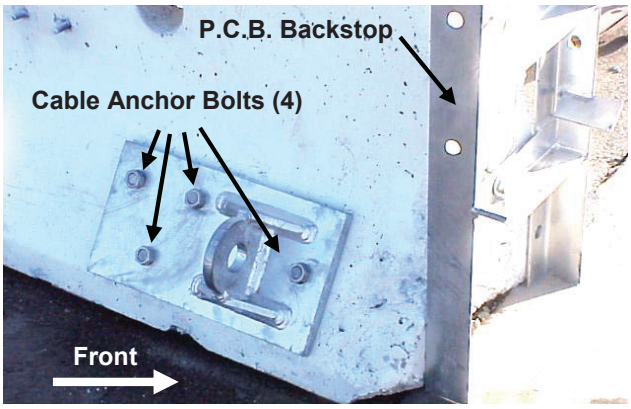

Use the Cable Anchor Plate as a template for the bolt holes (left side)

Step 3. Concrete Front Cable Anchors

Place the Front Cable Anchor in the desired final installation position. Use Appendix C for layout dimensions. Use the holes in the plate as a template to mark the location of the anchor bolt holes to the desired size and depth. The holes should be 150mm deep and 22mm diameter.

Use the front Anchor Plate as a template

Drill the Anchor bolt holes to the proper size and depth

Install and torque nuts on the anchor bolts

NOTE: It is important that the holes are drilled straight and in the correct position so that the plate will fit back over the bolts after they have been set with anchoring material. If the total hole depth cannot be reached due to rebar interference, a "diamond tip" drill or equivalent should be used to reach the total hole depth.

All Foundations – Parallel System

After the anchoring epoxy is properly cured, install a nut and washer on each of the anchor bolts extending through the base plates of the Backstop and Front Cable Anchor plate.

For PC Concrete foundations, torque the nuts to 160 N-m.

This photo shows a view of how the installation would look after the Backstop and Front Cable Anchor are securely fastened.

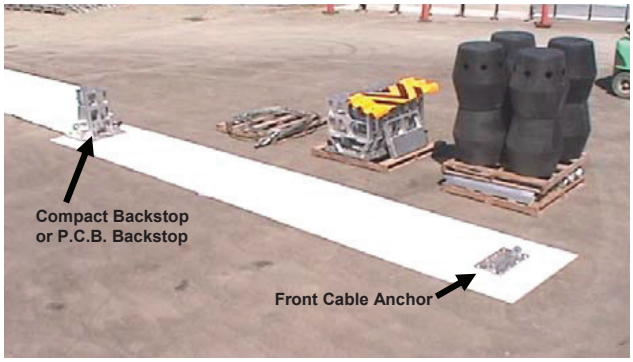

Connect Backstop and Front Cable Anchor installed

Step 4.

The Diaphragms should be spaced (one by one) evenly between the Front Cable Anchor and the Backstop. It is not important that they be exactly spaced at this point as they can easily be moved into the desired final assembly position when necessary.

Space Diaphragms between Anchors

This photo shows what the installation would look like after the diaphragms have been placed between the Backstop and the Front Cable Anchor.

NOTE: Do not install the Front Support Assembly and nose piece at this time, it will be installed later.

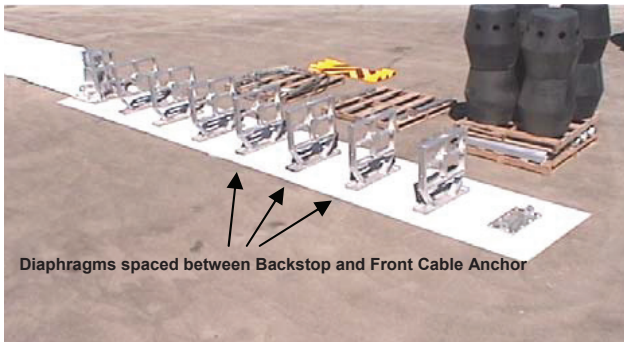

Product & Installation: TAU-II™ Crash Cushion

Step 5.

Starting at the upstream end of the system, thread the Guide Cable through the space in the bottom of the Diaphragms. Make sure to pull the threaded cable end through first so that it will end up at the back of the unit. (Make sure that the Guide Cable is threaded through the bottom of each Diaphragm.)

Push the threaded end of the cable through the hole in the anchor tab on the left side of the Compact Backstop. Install the nut on the end of the adjusting screw.

NOTE: Do not thread the nut beyond the end of the adjusting screw at this time. The nut will be tightened later.

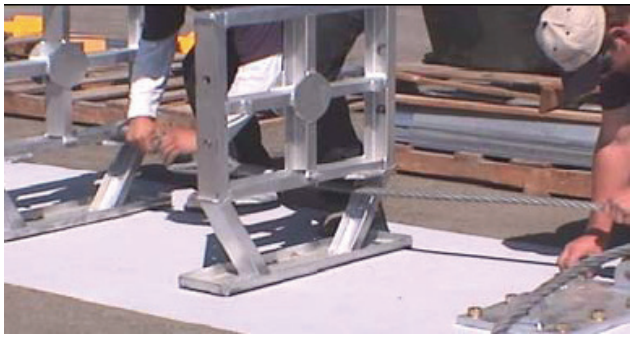

Thread the Guide Cable through the Diaphragms

Thread through the bottom of each diaphragm

PCB Backstop

Compact Backstop

Product & Installation: TAU-II™ Crash Cushion

Attach the other end of the Guide Cable to the left side of the Front Cable Anchor by first removing the pin from the clevis (shackle). Place the clevis over the anchor eye and re-install the pin through the eye, making sure that the handle portion of the pin is on the inside of the anchor assembly. Firmly tighten the pin. Pin handle of clevis on the inside of the anchor assembly.

Guide Cable to Front Cable Anchor

Repeat the process outlined in steps 6, 7, and 8, for the other cable. Install the second cable along the right side of the system without crossing the first cable.

Use the Cable Guide Assembly blocks to attach the Guide Cable to the bottom cross rail of the Diaphragms. The cable blocks consist of two grooved halves that, when put together, provide a path for the Guide Cable to move through.

Thread the second cable

It is easiest to install the Cable Guides by first placing the two halves of the blocks together around the cable. Next, hold the blocks and cable up to the plate on the bottom of the Diaphragm. Push the bolt from the top down through the plate and then through the blocks.

NOTE: See Page 33, Figure 9 for cable guide positions for wide flange systems.

Attach Cables to bottom of Diaphragms

Install a lock washer and nut to secure the bolt. Continue the process until all four of the attachment bolts are installed on each Cable Guide Assembly.

NOTE: If properly installed, the Guide Cable should slide freely through the Cable Guide blocks and the Diaphragm should slide freely along the cable.

Use an impact wrench (or hand tools) to securely tighten the (4) bolts holding the Cable Guide blocks to the plate on the bottom of each Diaphragm. Use the Cable Guide Hardware Kit # K001004.

This photo shows what the Diaphragms should look like after the Cable Guide blocks have been installed.

Compact Cables run through the Cable Guide blocks on the Diaphragms bottoms

Tighten Cable Guide Bolts

Step 6.

Attach the Pipe Panel Mounts to the sides of the Backstop. (The End Panels are not attached directly to the Backstop Diaphragm.) The Pipe Panel Mount attaches between the Backstop Diaphragm and the End Panel to facilitate proper system performance during side impacts in this area. The Pipe Panel Mount is made from a piece of 150mm diameter galvanised pipe with angles of material cut out of the top and bottom of one end.

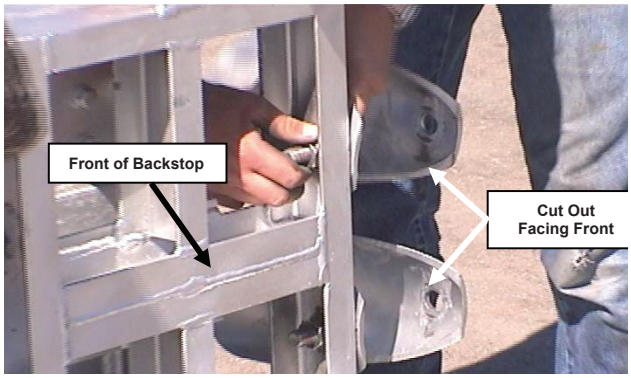

Pipe Panel Mounts attach to the compact backstop Diaphragm

NOTE: It is important that the end of the mount that is cut flat be facing the back (downstream) end of the system and that the cut out end of the Pipe Panel Mount be facing toward the front (upstream).

To attach the Pipe Panel Mount to the Backstop Diaphragm, place a washer on the attachment bolt and push the bolt through the inside hole on the Pipe Panel Mount and continue the bolt through the hole located on the side of the Diaphragm that is a part of the Backstop as shown in the photo above. Use the Pipe Panel Hardware Kit #K001017.

Install all four Pipe Panel Mounts

Step 7.

At this point you will start assembling the sides of the system. The first two side panels are installed together as the Sliding Bolt attaches both of the panels to the Pipe Panel Mount located on the side of the Backstop Diaphragm. Attach the right side End Panel and right side rear-most Sliding Panel to the Pipe Panel Mount using the Sliding Bolt.

Insert the Slider Bolt through the slotted portion of the last bay Sliding Panel. Continue the bolt through the front hole of the End Panel. Continue the bolt through the bolt hole in the outside of the Pipe Panel Mount as shown in the photo above.

NOTE: For the system to telescope properly, the slotted Sliding Panel MUST be on the outside of the End Panel.

This photo shows the end of the Slider Bolt coming through (from the outside) the slot in the last left bay side Sliding Panel, through the front hole of the End Panel and through th outer hole of the Pipe Panel Mount.

NOTE: See configuration chart to determine if you have "stacked" or "nested" slider panels in some locations.

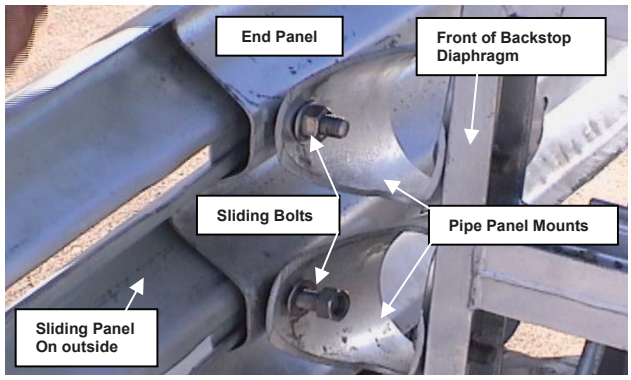

Install the End Panel and the last bay Sliding Panel together

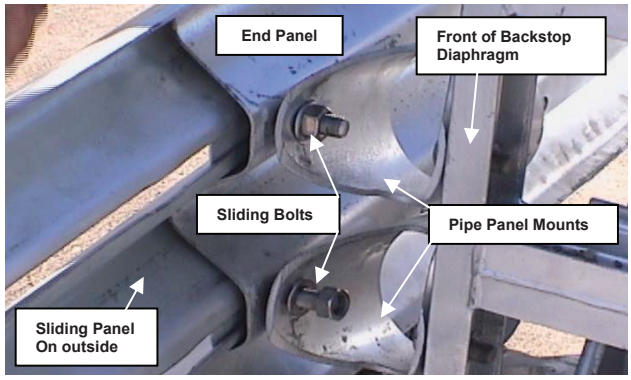

The Slider Bolt holds on the (last bay) Slider Panel and End Panel

Product & Installation: TAU-II™ Crash Cushion

NOTE: For ease in assembly of the rest of the system, hand tighten the nut on the Slider Bolts. The bolts will be tightened in a later step. Use Slider Bolt Hardware Kit #K001003.

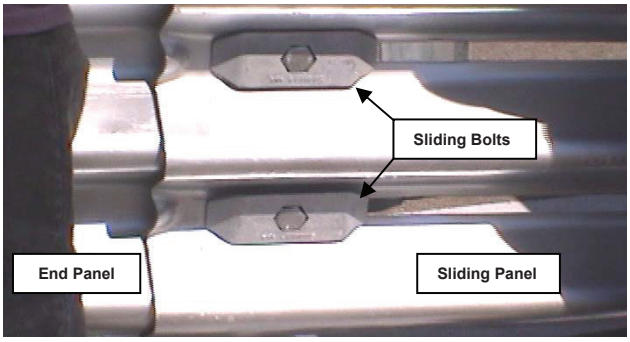

View from the outside showing the End Panel and Sliding Panel attached with the Slider Bolt

You will now attach the right side panels one-by-one, moving towards the front of the system. Attach the rear bay and second-to-last bay Sliding Panels to the first diaphragm using Sliding Bolts. Insert the Sliding Bolt through the slot in the second-to-last bay Sliding Panel. Continue pushing the bolt through the hole in the front of the last Sliding Panel and finally push the bolt through the hole in the side of the corresponding Diaphragm.

NOTE: For the system to telescope properly, the forward most slotted Sliding Panel MUST be on the outside.

Install each of the Sliding Panels

Repeat this step until all Sliding Panels have been mounted to the Diaphragms. The forward-most Sliding Panel must always be on the outside of the system (next to the mushroom head of the sliding bolt).

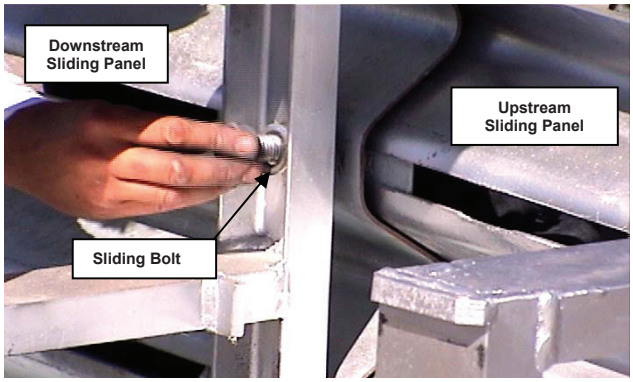

Hand tighten the nuts of the slider bolt

Product & Installation: TAU-II™ Crash Cushion

The photo above shows what the system will look like after the End Panel and all of the Sliding Panels have been installed on the right side as well as the End Panel and rear-most Sliding Panel on the left side. Continue attaching the Sliding Panels along the left side of the system until all of the Sliding Panels are installed.

NOTE: For the system to telescope properly, the forward most slotted Sliding Panel MUST be on the outside.

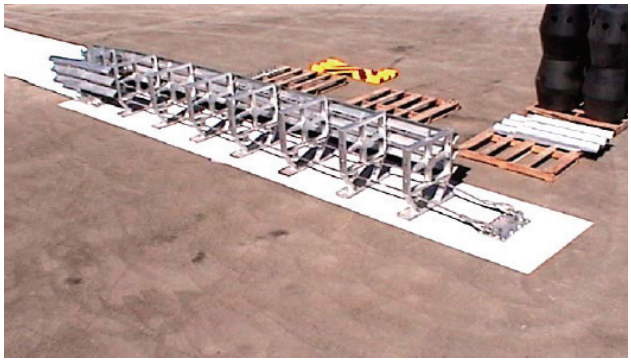

Right side slider panels installed – Left side End Panel and last Sliding Panel installed

This photo shows what the system will look like after both of the End Panels and all of the Sliding Panels have been installed.

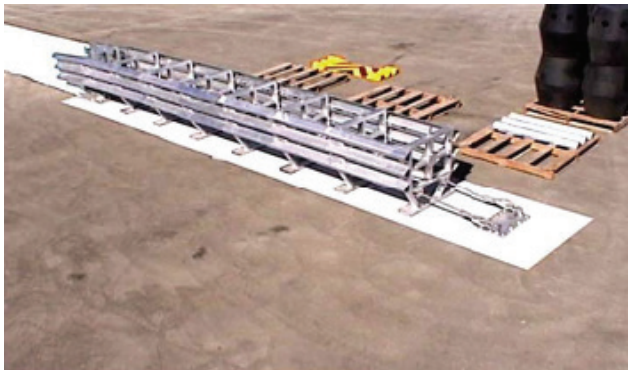

All End Panels and Sliding Panels installed

The final bay will be assembled separately from the rest of the system and then installed as a complete unit. The components that make up the final bay are two Sliding Panels, the Front Diaphragm, the Nose Cover and the Leg Supports.

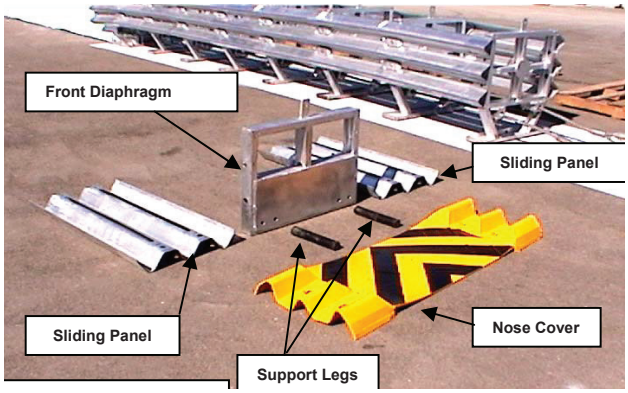

Nose Bay Components

Product & Installation: TAU-II™ Crash Cushion

Step 8.

Attach the Nose Cover and left Slider Panel to the Front Support. Install the bushing in the hole of the nose piece. Install the fender washer on the machine bolt (Slider Bolt not used) and push the bolt through the bushing in the Nose Cover hole. Continue the bolt through the hole in the front edge of the last-bay Slider Panel and finally push the bolt through the hole in the Front Diaphragm. Install the washer and hand tighten the nut. (The nut will be tightened later.) Use Nose Piece Hardware Kit #K001013.

Repeat the process outlined in Step 8 with the right side of the assembly.

Attach Nose Cover and Slider Panel to Front Support

Nose Bay Components

Front View of Assembled Nose Assembly

Rear View

Product & Installation: TAU-II™ Crash Cushion

The final step in the assembly of the nose bay is to install the Support Legs. Place the nose assembly on its side. Push one of the leg support machine bolts and washer through the hole in the bottom rail of the Front Support. Screw the Leg Support onto the bolt and tighten the bolt with a wrench or socket.

Warning: DO NOT OVER-TIGHTEN THIS BOLT.

Use the Front Support Leg Hardware Kit #K001005.

Bolt the Support Legs to the bottom of the Front Support Assemble

Carry the complete nose bay assembly to the front of the system. Attach the Slider Panels to the diaphragm by pushing the Slider Bolt through the slots in the final bay Slider Panels and then through the hole in the front of next bay Slider Panel. Finally, push the Slider Bolt through the hole in the side of the Diaphragm and attach the flat washer and nut.

Carry the assembled Support Assembly into position to attach

NOTE: For the system to telescope properly, the forward most slotted Sliding Panel MUST be on the outside.

It is important to make sure that the system bays are fully extended to ensure that the Energy Absorbing Cartridges will fit properly. Pull the Slider Panels off each bay until fully extended, working from the base toward the nose assembly.

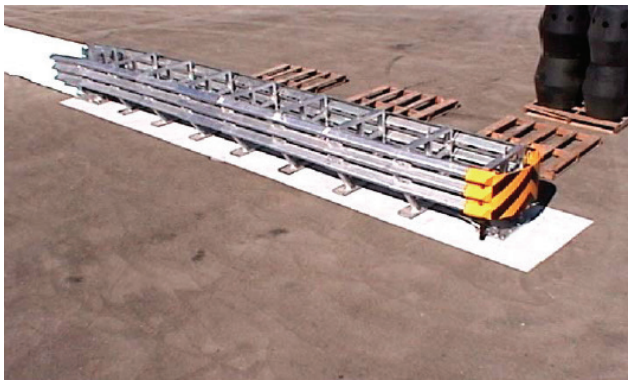

View of assembled system (except Cartridges)

Product & Installation: TAU-II™ Crash Cushion

Torque all of the Sliding Bolts to 27N-m. Torque the Front Panel Bolts (holding nose cover) to 270N-m. **Do not over tighten.**

Torque each of the Slider Bolts

Step 9.

Insert a Type "A" Energy Absorbing Cartridge into each of the first three (3) bays of the 8 bay (TL-3) system. The Type "A" cartridges have holes and slots on the sides toward the end of the cartridge. Install

each cartridge on its side with the holes and slots facing the front (upstream) of the system. Insert a Type "B" Energy Absorbing Cartridge into the remaining five (5) bays. The Type "B" Cartridges have three holes on one end of the cartridge. Install each cartridge on its side with the holes facing the back (downstream) of the system. Refer to the matrix in Appendix "A" for proper cartridge configurations.

NOTE: For proper system performance, the Energy Absorbing Cartridges must be installed in the proper order and in the proper direction as shown in Appendix "A".

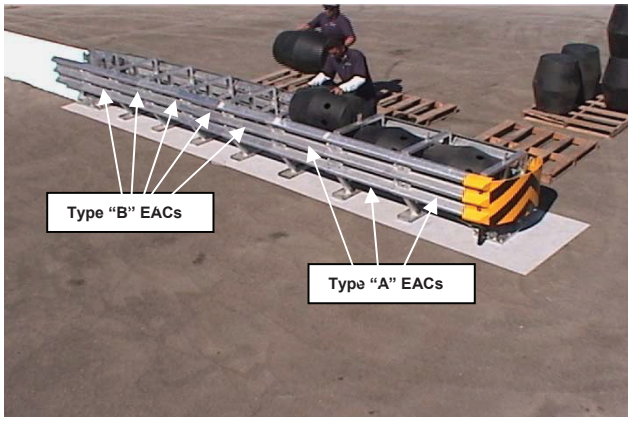

Product & Installation: TAU-II™ Crash Cushion

Step 10.

The Final step in the installation of the TAU-II system is to apply tension to Guide Cables that run underneath the system. Torque the nut on the end of the threaded cable end to 680N-m. Torque the nut on the end of the adjustable Eye Bolt to 160N-m.

NOTE: For proper performance, the cables must be tensioned properly.

Tension the Guide Cables with a torque Wrench

Step 11.

Use the check list on page 48 to confirm that all of the installation steps have been completed.

This photo shows what a completely installed Test Level 3 TAU-II system with a compact backstop will look like

TAU-II® Crash Cushion – Tapered System

Introduction

This manual is organised in steps that address each of the different installation options that are available. The TAU-II® system is very versatile and also easy to assemble and install if these basic guidelines are followed.

The TAU-II® system has been tested to meet the rigorous requirements of NCHRP Report 350, Test Levels 2 and 3. The systems are provided in lengths and capacities for both low speed and high speed applications and hazard widths up to 2.6m.

The TAU-II® system is redirective, non-gating, and is ideally suited for hazards such as the ends of rigid barriers, tollbooths, utility poles, and more. Ease of installation, numerous nonproprietary transition options, low maintenance requirements, very low life cycle costs and reusability of system components make the TAU-II® system ideal for treating many roadside hazards.

Redirective, non-gating crash cushions are highway safety devices whose primary function is to improve the safety for occupants of errant vehicles that impact the end of rigid or semi-rigid barriers or fixed roadside hazards by absorbing the kinetic energy of impact or by allowing controlled redirection of the vehicle. These devices are designed to safely decelerate an errant vehicle to a safe stop or redirect an errant vehicle away from roadside or median hazards. These types of systems are typically applied to locations where head-on and angled impacts are likely to occur and it is desirable to have the majority of post impact trajectories on the impact side of the system.

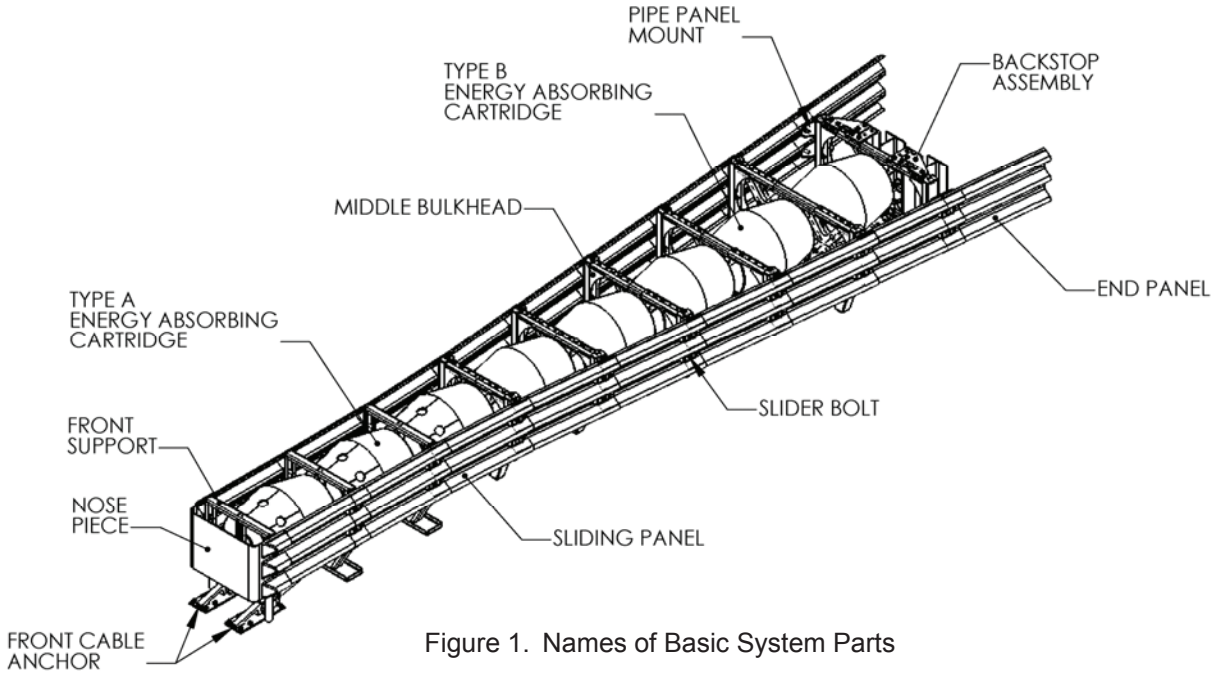

Figure 1. Names of Basic System Parts

System Overview

The TAU-II® system is designed and constructed to provide acceptable structural adequacy, minimal occupant risk and safe vehicle trajectory as set forth in NCHRP 350 for redirective, non-gating crash cushions. Refer to Figure 1 to familiarise yourself with the basic parts and part names of the system.

The TAU-II® system is designed to shield the ends of median barriers and other fixed objects likely to be struck head-on, by absorbing and dissipating the kinetic energy of impacting vehicles. TAU-II® systems utilise disposable Energy Absorbing Cartridges (EACs) to absorb the kinetic energy of the impacting vehicle. The EACs are separated by diaphragms and held in place with a framework of Thriebeam corrugated steel rail panels that "telescope" rearward during head-on impacts. As the vehicle compresses the cushion, it exerts a force on the first bay containing an EAC. The diaphragms distribute the impact forces uniformly to all the remaining cartridges in each bay until the vehicle eventually stops. The depth of penetration is dependent upon both the original impact speed and the mass of the impacting vehicle. Only the Energy Absorbing Cartridges are expended after most head-on impacts.

When hit at an angle along the side, the system is restrained laterally by guidance cables that run the length of the system and attach to the bottoms of the diaphragms and terminate at the anchors at each end of the system. The front and rear cable anchors are attached to the foundation as described in Appendix "C" Foundation Requirements.

STEP 1 - Foundation Requirements

The TAU-II® crash cushion is designed to be compatible with a variety of foundations. If an existing foundation is present, verify dimensions and system layout. If modification is required, use the specifications as a guideline and adapt accordingly. If no foundation is present or currently does not meet the system requirements, construct the foundation per these specifications.

There are different foundation configurations depending on the system used and the type of backstop selected. Systems up to 910mm can have a P.C.B. (Portable Concrete Barrier) Backstop, Flush Mount Backstop or a stand-alone Compact Backstop. PCB and Compact Backstop systems are compatible with the optional Asphalt Anchoring Kits. Systems 1070mm and greater use a Wide Flange Backstop and require a PCC (Portland Concrete) foundation and anchoring kit.

NOTE: Recommended maximum 8% cross slope on all foundation options.

Product & Installation: TAU-II™ Crash Cushion

Foundation options for all configurations are specified in the following drawings contained in APPENDIX "C", Page 52:

General Foundation and Anchorage Specs
Drawing No. A040113 — Page **53**

Universal TAU-II® Foundation, **PCB Backstop**-PCC Concrete Pad:
Drawing No. A040105 — Page **54**

Universal TAU-II® Foundation **PCB Backstop**-PCC Block:
Drawing No. A040117 — Page **55**

Universal TAU-II® Foundation **PCB Backstop**-Asphalt Anchoring:
Drawing No. A040112 — Page **56**

Universal TAU-II® Foundation **Compact Backstop**-PCC Concrete Pad:
Drawing No. A040102 — Page **57**

Universal TAU-II® Foundation **Flush Mount Backstop**-PCC Pad:
Drawing No. A040420 — Page **58**

Universal TAU-II® Foundation **Compact Backstop**-PCC Blocks:
Drawing No. A040115 — Page **59**

Universal TAU-II® Foundation **Compact Backstop**-Asphalt Anchor:
Drawing No. A040110 — Page **60**

Universal TAU-II® Foundation **Wide Flange Backstop**-PCC Concrete Pad:
Drawing No. A040108 — Page **61**

Universal TAU-II® Foundation **Dimensions Metric Units** — Page **62 - 63**

Variations of these foundations may be reviewed and determinations made as to equivalence by the project engineer.

For additional information on the TAU-II® System please call **ACP on 02 8708 4400 or go to www.acprod.com.au**

STEP 2 - Anchor System to Foundation

With the proper foundation in place, anchor the Backstop, Rear Cable Anchors, and Front Cable Anchors according to the particular foundation detail (refer to Step 1).

The anchorage of the system must be in accordance with the foundation specifications found in Appendix "C".

To anchor the Universal TAU-II® system:

1) Determine the backstop components and Front Cable Anchor positions about the centerline of the system. The foundation drawings show positioning.
2) Using the actual parts as templates, either mark the holes to be drilled or drill through the parts acting as guides.
3) Hole diameter and depth depends on the foundation and the anchoring compound used. See chart below for the hole diameter as specified by the anchoring compound manufacturer. Reference Foundation and Anchorage Specifications in APPENDIX "C" for specific embedment depths.
4) Prepare the holes as specified by the anchoring compound manufacturer.
5) With the Front Cable Anchor and backstop components in place, apply the anchoring compound to the holes as specified by the manufacturer. Insert the anchors into the holes with the nuts and washers attached.
6) Allow anchoring compound to cure before tightening the anchors.

The anchoring package supplied with the Universal TAU-II® system contains the necessary threaded rods and anchoring compound needed to install the system. Follow the instructions on the supplied package and reference the guidelines outlined below.

Anchor holes should be drilled using air-flushed or water-flushed rotary percussive drilling equipment. If diamond core or non-percussive drills are used, the hole must be thoroughly scoured using a coarse wire flue brush.

Other anchoring materials can be used if they comply with the following specifications: material should meet the ASTM C307 tensile strength of 2,000 psi (14 Mpa) and compressive strength of 10,000 psi (70 Mpa) per ASTM C109 or C579. The anchoring compound should provide a pull out strength of 89kN minimum in 4,000 psi (28 Mpa) concrete. Products such as HILTI HIT HY150 injection Adhesive Anchor, RE500 injection Adhesive Anchor or HVA Adhesive Anchoring System fit these criteria. Refer to Table 1 below for required hole size for recommended anchor compounds.

Mechanical / Removable Anchors

When standard chemical anchors cannot be used to secure the product as a result of local roading authority requirements, mechanical anchors may be used. Various mechanical anchors are available that use wedge, self-undercutting, or expansion coils to establish the locking bond with the concrete. A minimum of 80kN ultimate load in the tension (pull out) and a shear of 98kN is required.

Torque anchors set in PCC concrete to 160N-m.

IMPORTANT: FOLLOW MANUFACTURER'S SPECIFICATIONS FOR HOLE SIZE AND PREPARATION.

Anchoring Compound	Hole Diameter
US Anchor Ultra Bond Speed Set	22mm
HILTI – HIT HY 150	20.5mm
HILTI – HVA Adhesive Anchor System	22mm
HILTI – RE 500	20.5mm to 25mm

STEP 3 - Assemble Bulkheads

The Universal TAU-II® is comprised of multiple bulkheads assembled to create a variety of different system lengths and widths. Systems are constructed with different bulkheads depending on the size of the system that is needed.

As illustrated in Figure 2, systems can be fully parallel, fully tapered or a combination. Every system requires a Front Support, a series of Middle Bulkhead Assemblies and a Backstop Assembly.

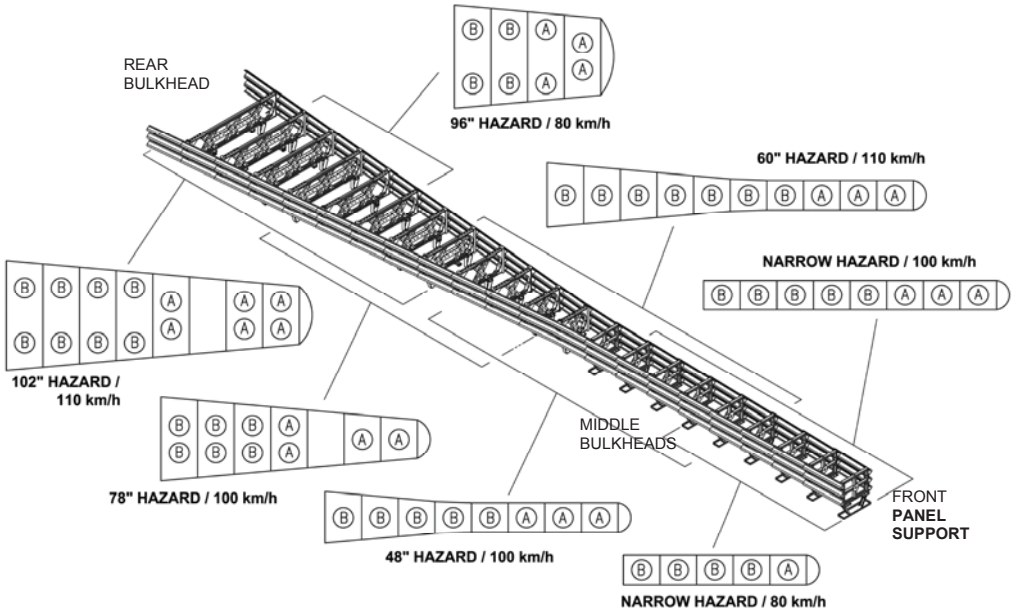

Figure 2.

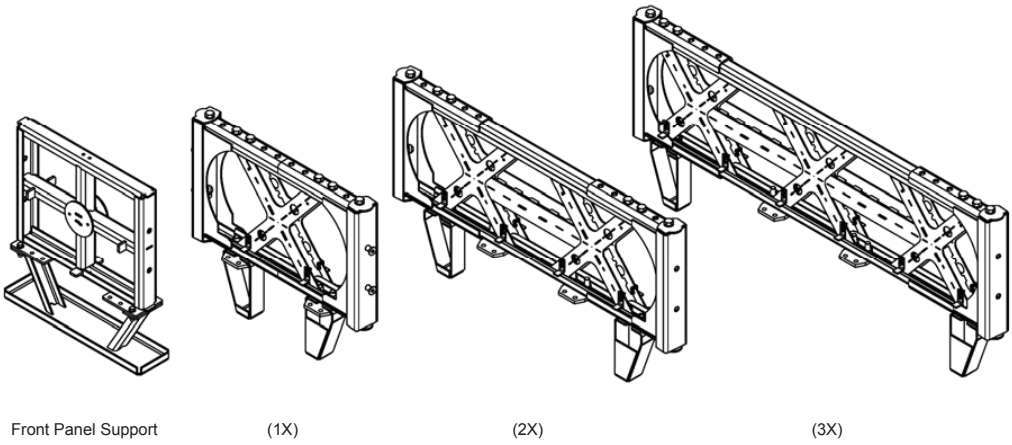

Figure 3. Middle Bulkheads

The Front Support

The Front Support is different from a bulkhead in that it has polymer front support Legs and it doesn't attach to the cables underneath the system. The Front Support also has metal plates called Collision Plates, attached in the impact area on the front of the assembly. The Front Support can be built in different variations depending on the system size.

Using a Front Support: (parallel and combination systems)

Parallel and combination systems use the Front Support (Figure 4). A tapered system designed with a large nose section may use a modified 1X, 2X or 3X bulkhead for the Front Support (Figure 5).

The polymer front support legs bolt directly to the bottom of the Front Support using the hardware provided. All fasteners use a lock washer or Locktite.

Using a modified Bulkhead for Front Support (Tapered systems)

An X style bulkhead can also be used as a Front Panel Support. The X style bulkheads are assembled according to the specific system requirements (Figure 5). Refer to the system drawing for the front bulkhead size needed. The Wing Assemblies slide over the ends of the bulkhead weldment and adjust to the width needed.

A Single X Bulkhead (1X) provides for Front Support widths of 760mm (using Transition Wing Assembly), 910mm, 1070mm, and 1220mm.

A Double X Bulkhead (2X) provides for Front Support widths of 1370mm, 1525mm, 1680mm, and 1830mm.

A Triple X Bulkhead (3X) provides for Front Support widths of 1980mm, 2130mm, 2290mm, and 2440mm.

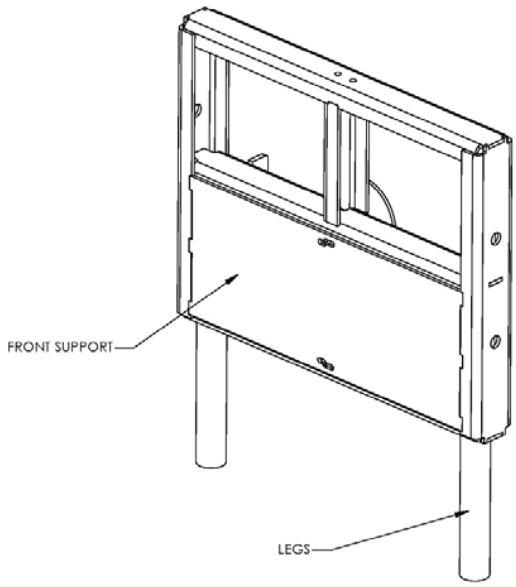

Figure 4. Use the Front Support for a parallel or combination systems

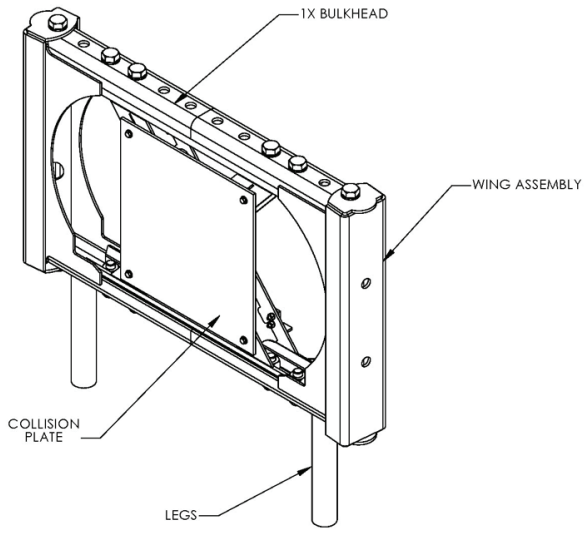

Figure 5. A 1X Style Middle Bulkhead converted into a Front Support

The Wing Assemblies are bolted in the appropriate location using Backing Plates and the hardware provided. All fasteners use a lock washer or Locktite (Figure 5).

The polymer front support legs bolt directly to the bottom of the assembly using free holes on the Wing Assemblies and the hardware provided (Figure 4,5). Some configurations require a leg adapter (Figure 6).

AC Locating Tabs are bolted to the back of the assembly and Front Collision Plates are bolted to the front of the assembly. All fasteners use a lock washer and Locktite.

Middle Bulkhead Assemblies

The Middle Bulkheads come in two different styles: fixed and adjustable X-style. Depending on the system's cable location, the Cable Guide Mounting plates bolt to the bottom of the assembly at one of three positions.

Parallel Middle Bulkhead

The width of the Parallel Middle Bulkhead is not adjustable and is used in systems that are totally parallel or systems that start out parallel and finish with a rear taper (Figure 7).

Adjustable Middle Bulkheads

The Adjustable Middle Bulkheads come in three different widths and are designated by the number of X patterns on the face of the bulkhead (Figure 3). The narrowest has a single X in its structure, the double X has two and the largest bulkhead has three X's.

All of the bulkheads have adjustable wings that are rigidly bolted on to each side (Figure 8). Using the adjustable wings, the different sized bulkheads can accommodate hazard widths up to 2.6m. The bulkheads can descend in 150mm increments until reaching the desired width.

The adjustable Middle Bulkheads are assembled according to the specific system requirements. Refer to the system drawing for the middle bulkhead sizes needed. The Wing Assemblies slide over the ends of the bulkhead and adjust to the width needed.

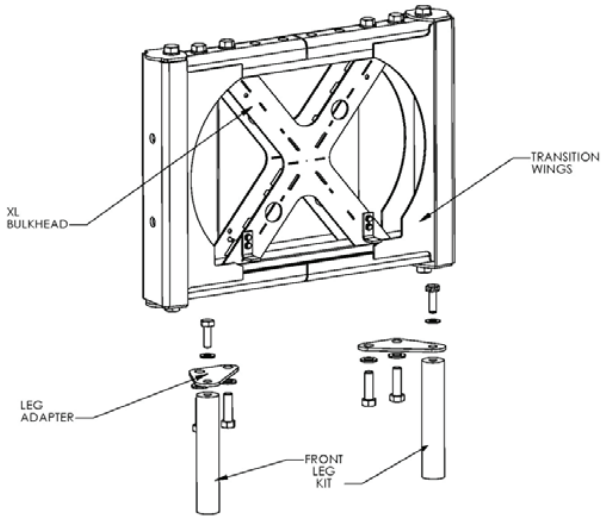

Figure 6. Leg Adapters

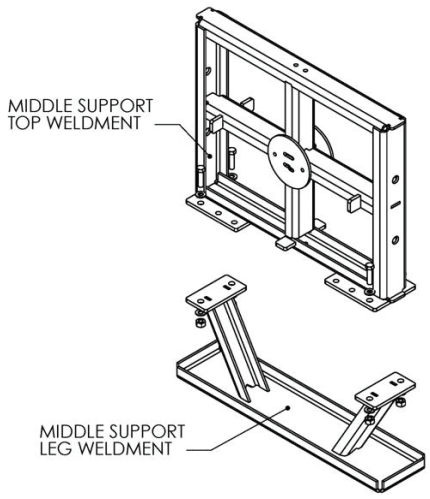

Figure 7. Parallel Middle Bulkheads

Product & Installation: TAU-II™ Crash Cushion

- Single X (1) Middle Bulkheads provide for assembly widths of 760mm (using Transition Wing Assembly), 910mm, 1070mm, and 1220mm.
- Double X (2X) Middle Bulkheads provide for assembly widths of 1370mm, 1520mm, 1680mm, and 1830mm.
- Triple X (3X) Middle Bulkheads provide for assembly widths of 1980mm, 2130m, 2290mm, 2440mm and 2.6m.

The Wing Assemblies are bolted in the appropriate location using Backing Plates and the hardware provided. The Legs bolt directly to the bottom of the assembly where the Wing Assemblies attach using the same hardware. All fasteners use a lock washer or Locktite.

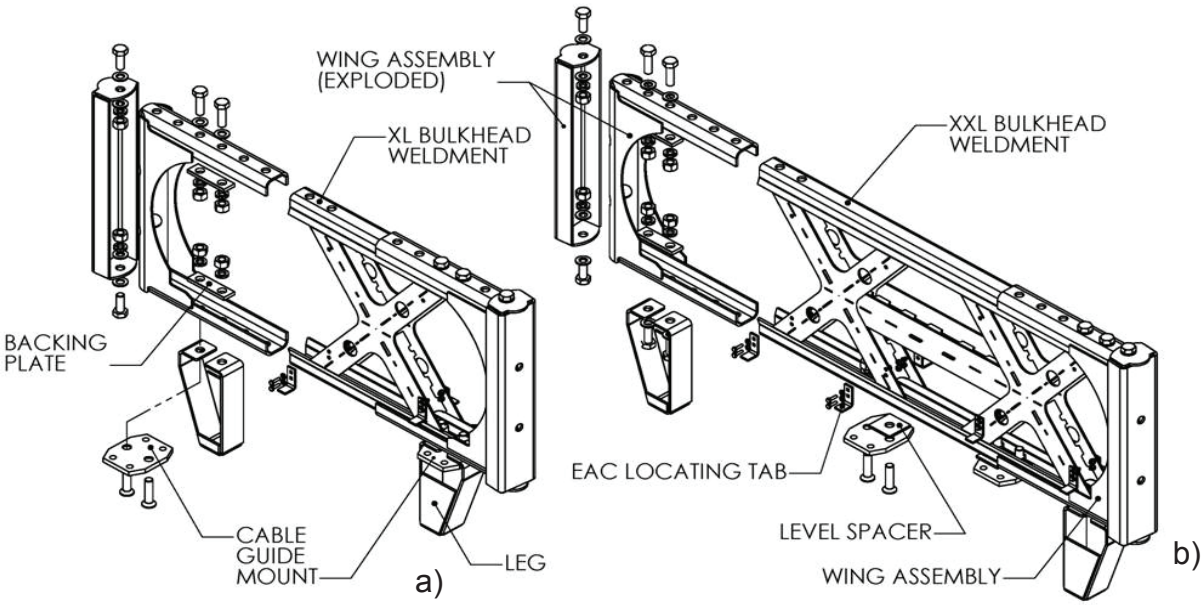

Figure 8. Adjustable Middle Bulkheads a) Single X (1X) b) Double X (2X)

Cable Guide Mounts

If a parallel or 1X bulkhead is used as the Front Bulkhead Assembly, the cable is in the 1st position (Figure 9) and the Cable Guide Mounts would bolt in the corresponding location.

If a 2X or 3X bulkhead is used as the Front Bulkhead Assembly, the cable is in position 2 or 3 (Figure 9) respectively and the Cable Guide Mounts attach accordingly. If said cable position aligns with the leg mounting position the Cable Guide Mount bolts through the leg using the hardware provided for the Cable Guide Mount.

Backing Plates are used on all Leg, Wing Assembly, and Cable Guide fastenings. A Level Spacer is used when attaching components across the step between the Bulkhead.

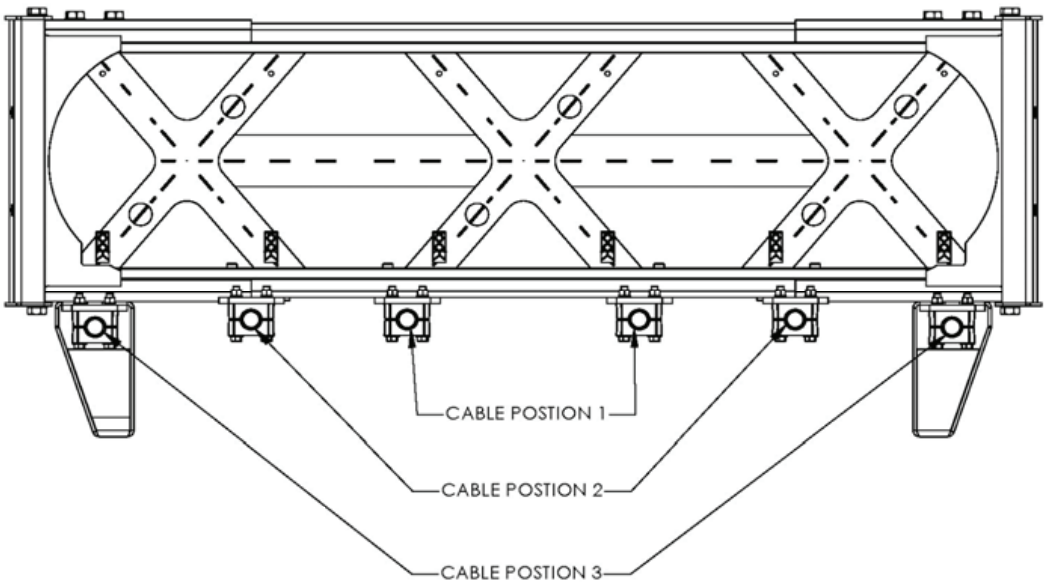

Figure 9. Guide Cable Position

Weldment and the Wing Assembly

EAC Locating Tabs

EAC Locating Tabs are bolted to the front and back of each Middle Bulkhead Assembly. All fasteners use a lock washer or Locktite (Figure 8).

Lateral Cable Support

Some systems require a Lateral Cable Support Kit (Refer to Step 10 of this manual). The Lateral Cable Support Kit contains Bulkhead Mounts that attach to the last two bulkhead assemblies of required systems. They bolt to the outermost free holes in the Wing Assemblies (Figure 10). They do fit inside the Legs if necessary (Figure 11).

NOTE: Refer to the System Configuration chart in Appendix "A" to determine if Lateral Cable supports are required.

Empty Bay Bumpers

Some systems require an empty bay (no Energy Absorbing Cartridges). These systems utilize a Bumper Kit to minimize damage in an impact (Figure 12). The kit includes (4) Bumpers that mount to the rear bulkhead assembly of the empty bay. Two Bumpers mount to the top of the assembly at the Wing to Bulkhead joint using the same hardware. The other two Bumpers mount through the Leg to the Wing – Bulkhead joint.

NOTE: Refer to the System Configuration chart in Appendix "A" to determine if empty bays are required.

Following complete assembly of the Front, Middle, and Backstop Bulkhead assemblies, position them in order. Space them at approximately 860mm apart, center to center.

Also, align them through the centerline of the system. Accuracy and care taken here will improve ease of assembly and reduce efforts to straighten the system.

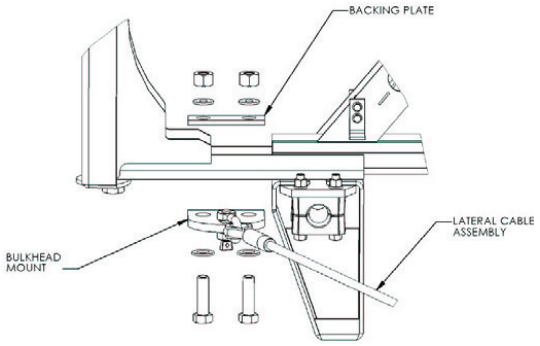

Figure 10. Lateral Cable Support

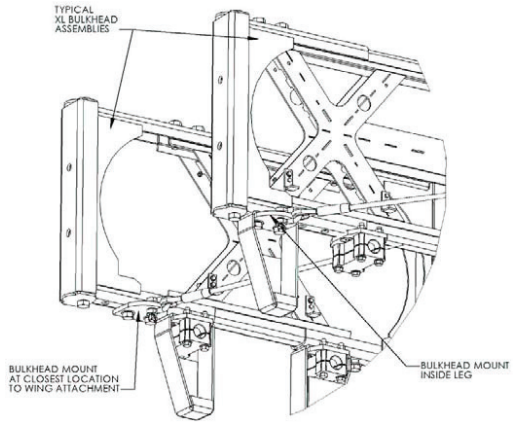

Figure 11. Lateral Cable Supports mounted inside and outside the leg

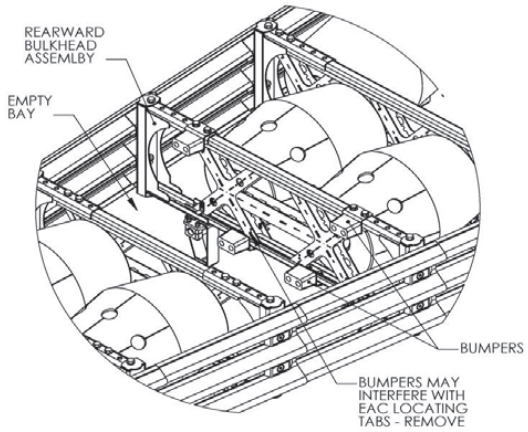

Figure12. Empty Bay Bumpers

STEP 4 - Backstop Assemblies

The Backstop Assembly is selected per application and can be configured to protect hazards up to 2.6m in width. Backstops can either be attached directly to a barrier wall or a suitable structure (Portable Concrete Barrier (PCB) Backstop, Flush Mount Backstop) or installed as a stand-alone system (Compact Backstop, Wide Flange Backstop). All backstops require minimum assembly if they are not pre-assembled.

PCB Backstop

The PCB Backstop (Figure 13) is configured from parts anchored directly to an existing concrete barrier wall. Refer to Step 1 and Step 2 for PCB Backstop layout and anchorage details. Pipe Panel Mounts bolt to the sides of the backstop and provide a mounting point for the Slider and End Panels.

Refer to the System Configuration Chart in Appendix "A" to determine system widths and Capacity Limitations.

If a 910mm Backstop is desired, attach the 910mm Backstop Adapters (Figure 14) to the sides of the backstops and bolt the Pipe Panel Mounts to the pivoting sections.

If the system is installed on an asphalt foundation, the portable concrete barrier must be anchored using the supplied brackets. Also, the Backstop Brace Weldment must be bolted to the Compact Backstop prior to anchoring.

For additional information on the TAU-II® System please call **ACP on 02 8708 4400 or go to www.acprod.com.au**

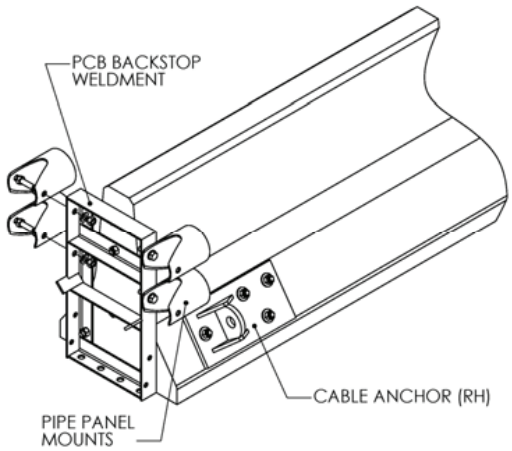

Figure 13. PCB Backstop (Parallel System)

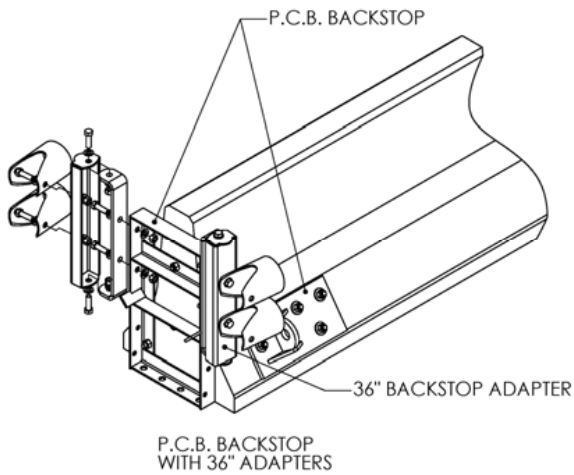

Figure 14. PCB Backstop (Tapered System)

Compact Backstop

The Compact Backstop (Figure 15) is bolted together in two halves and is usually pre-assembled. The Backstop is a stand alone design is not anchored to the hazard being protected.

Refer to Step 1 and Step 2 for Backstop layout and anchorage details.

Pipe Panel Mounts bolt to the sides of the backstop and provide a mounting point for the Slider and End Panels. Refer to the system drawing for the backstop assembly size needed.

If a 910mm Backstop is desired, attach the 910mm Backstop Adapters (Figure 16) to the sides of the backstops and bolt the Pipe Panel Mounts to the pivoting sections.

For additional information on the TAU-II® System please call **ACP on 02 8708 4400 or go to www.acprod.com.au**

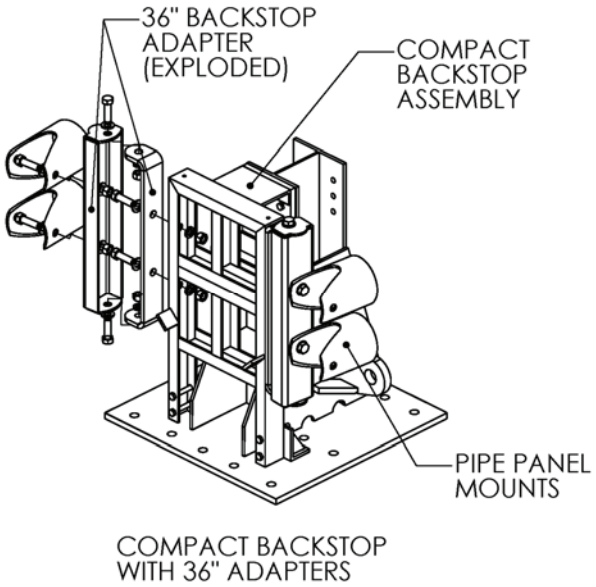

Figure 15. Compact Backstop (Parallel Systems)

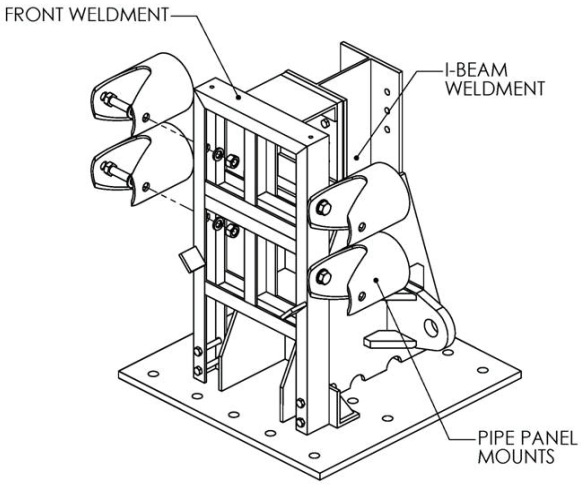

Figure 16. Compact Backstop (Tapered Systems)

Flush Mount Backstop

The Flush Mount Backstop system (Figure 17) is intended for applications where the hazard width exceeds the limitations of the PCB Backstop and are applicable in locations with limited foundation size. The Flush Mount Backstop can be attached to reinforced safety shape or vertical concrete structures up to 36" 910mm. Systems over 610mm wide require the 910mm adapter. Edges of vertical concrete may require chamfer according to local standards.

The Cable Tensioning is moved to the front of the system so the rear cable anchors do not protrude outside of the rear extension panels.

The backstop is attached to the foundation and to the concrete backstop. Install anchors in accordance with specifications. Vertical slots on the backstop allow removal replacement of the backstop. Anchors must be placed at the top of said slots to be effective. Flush Mount Backstop systems use the same cable used in all parallel systems.

The cable is installed with the threaded tensioning end forward. The looped end is pinned in place at the backstop. The Front Cable Anchor uses an inserted key to keep the threaded stud from rotating during tensioning.

For additional information on the TAU-II® System please call **ACP on 02 8708 4400 or go to www.acprod.com.au**

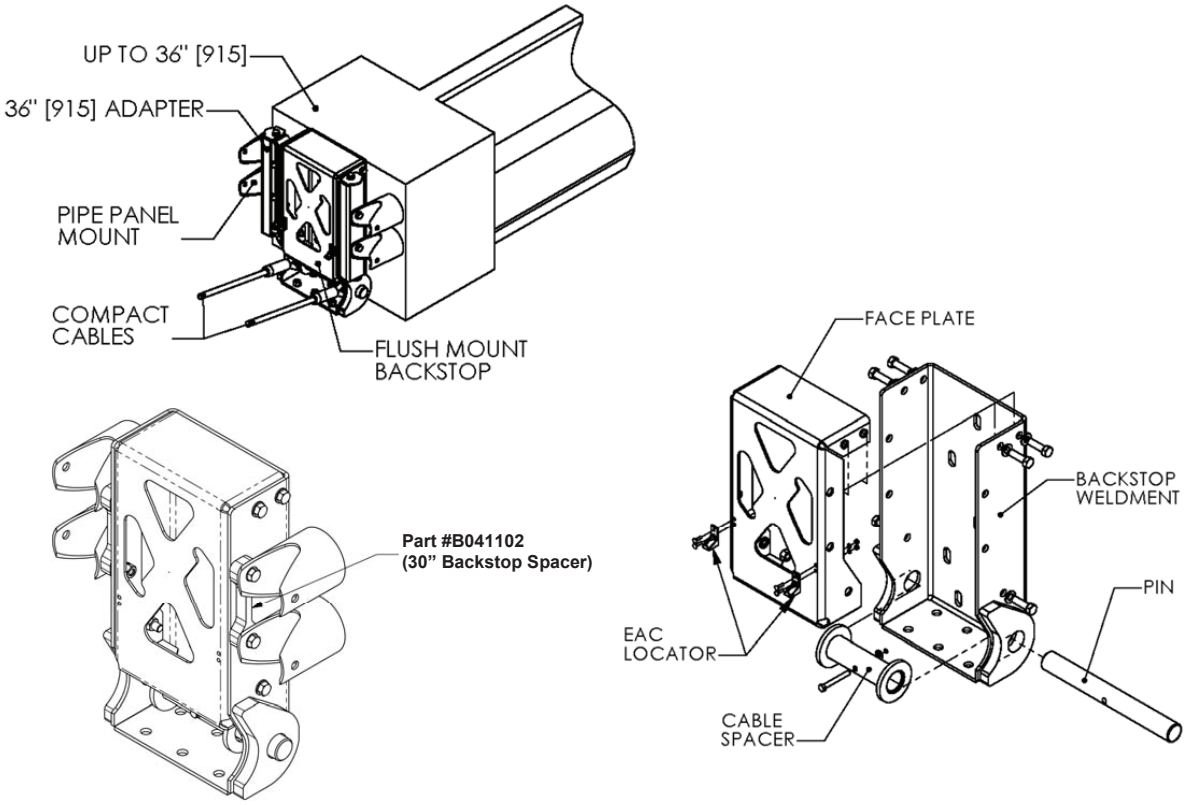

Figure 17. Flush Mount Backstop

Wide Flange Backstop

The Wide Flange Backstop (Figure 18) uses a combination of backstop elements to protect wide hazards. The Wide Flange Backstop incorporates XL, XXL, or XXXL bulkhead assemblies attached to two Wide Flange Backstop Weldments.

The backstop bulkheads are assembled according to the specific system requirements. The Wing Assemblies slide over the ends of the bulkhead weldment and adjust to the width needed.

- XL Bulkheads provide for backstop bulkhead assembly widths of 1070mm (using Transition Wing Assembly), 1220mm, 1370mm and 1525mm.
- XXL Bulkheads provide for backstop bulkhead assembly widths of 1680mm, 1830mm, 1980mm and 2130mm.
- XXXL Bulkheads provide for backstop bulkhead assembly widths of 2290mm, 2440mm and 2290mm.

Backstop Block-outs mount to the bulkhead assemblies at the Wing Assembly to Bulkhead Weldment joint. The block-outs are bolted through the Wing Assemblies and bulkhead weldment and fastened using Backing Plates and the hardware provided. The bulkhead assembly and block-outs are then bolted to the Wide Flange Backstop Weldments. Pipe Panel Mounts are fastened to the pivoting section of the Wing Assemblies. EAC Locating Tabs bolt to the front of the bulkhead assembly. All fasteners use a lock washer or Locktite.

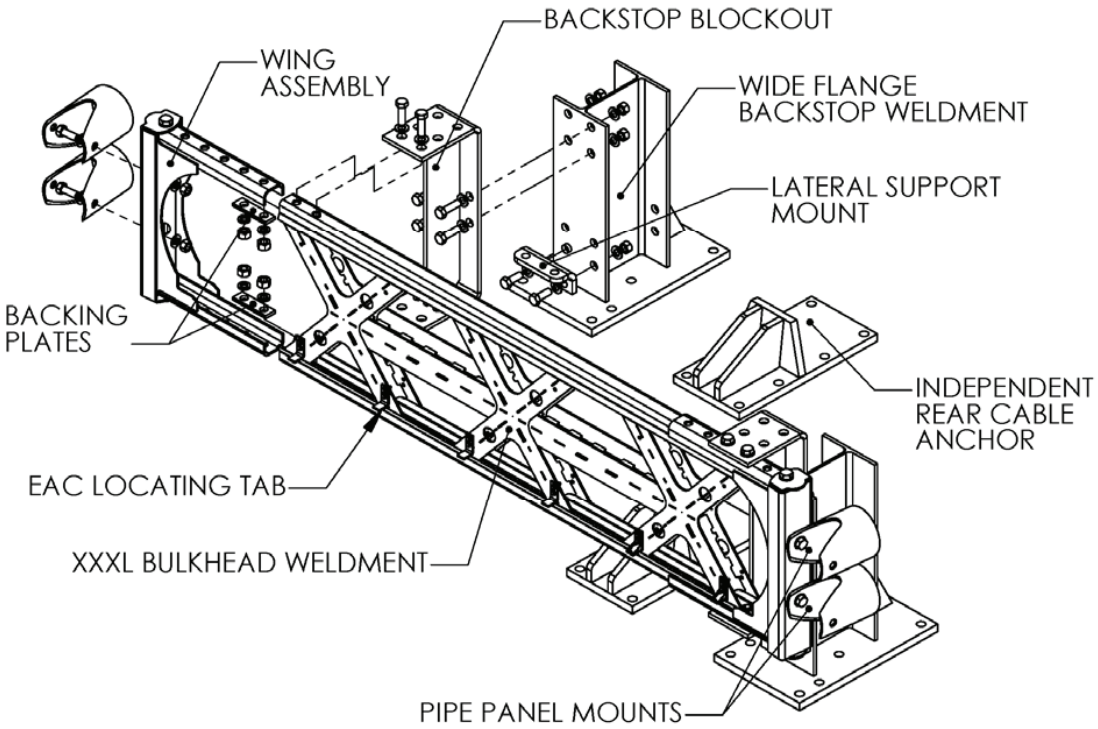

Figure 18. Wide Flange Backstop – 3X

Product & Installation: TAU-II™ Crash Cushion

Depending on the position of the cables in reference to the Wide Flange Backstop positioning, either an independent rear cable anchor (Figure 18) or a backstop mounted rear cable anchor (Figure 19) will be used. The independent rear cable anchor stands alone and requires no assembly.

(Reference Step 1 and Step 2 for layout and anchorage specifications). The backstop mounted rear cable anchor bolts between the flanges of the Wide Flange Backstop. They are mounted to the interior of the system. All fasteners use a lock washer or Locktite. When the front support bulkhead and backstop utilise the same bulkhead, the rear cable anchors are mounted to the backstops. When the front support bulkhead and backstop bulkheads are different, the system is supplied with independent rear cable anchors mounted on the pad surface.

Some systems require a Lateral Cable Support Kit. The Lateral Cable Support Kit contains Lateral Support Mounts that attach to the backstop assembly of required systems. They bolt to the front of the Wide Flange Backstop Weldments in the lowest hole set. If backstop mounted rear cable anchors are used, one of the bolts will be shared. All fasteners use a lock washer or Locktite.

Refer to the System Configuration Chart in Appendix "A" to determine if Lateral Cable supports are required.

If the Wing Assemblies of the particular backstop are adjusted to one of their two most extended positions 1370mm, 1525mm, 1980mm, 2130mm and 2290mm backstops), Wing Braces and Spacers are required (Figure 19). The Wing Braces attach to the Wing Assemblies and the Backstop Block-outs on the top and bottom. The Spacers level their mounting surfaces. All fasteners use a lock washer or Locktite.

For additional information on the TAU-II® System please call **ACP on 02 8708 4400 or go to www.acprod.com.au**

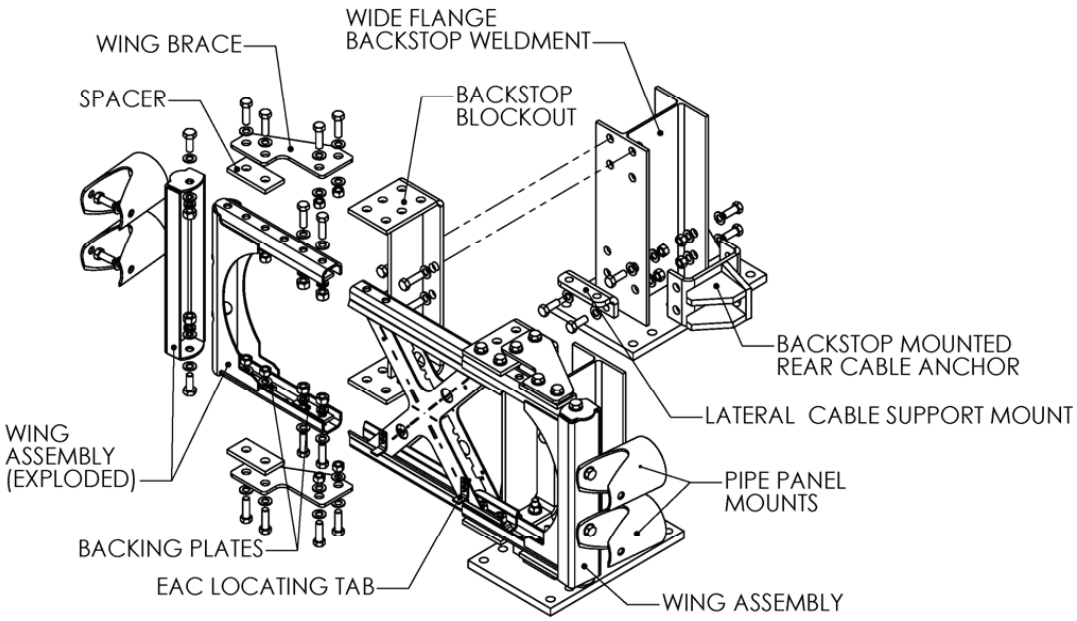

Figure19. Backstop – 1X with Wing Braces

STEP 5 - Attach Panels

The Universal TAU-II® system uses two types of panels: Sliding Panels (Figure 20) and End Panels (Figure 21). Sliding Panels have a pair of holes forward and two long slots running the length of the panels. End Panels have a pair of holes at each end and do not have slots. Sliding panels are used on all collapsing bays. End panels are attached to the backstop only (Call CSP Pacific for non-proprietary transition options). Slider Bolts hold the panels to the bulkheads. Some systems require nested panels (doubled) on rearward bays.

NOTE: Refer to the System Configuration Chart in Appendix "A" to determine if/where nested panels are required. A long bolt is supplied to assist in the assembly to nest the panels.

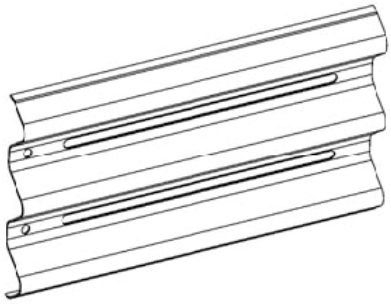

Figure 20. Slider Panel

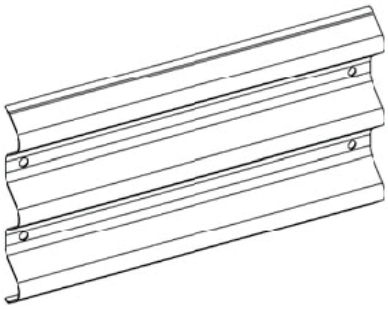

Figure 21. End Panel (no slots)

Install the panels from back to front staggering from each side. Place the End Panels first. While holding the End Panel in place, lap the forward Sliding Panel over it and bolt through the slot, End Panel, and Pipe Panel Mount (Figure 22). Leave the nuts of the Slider Bolts loose and perform on both sides. Lap the next forward Sliding Panel and bolt through the slot, hole set in rearward Sliding Panel, and bulkhead. Leave the Slider Bolt nuts loose and progress forward alternating sides (Figure 23). If the bay requires nested panels, perform procedure with (2) panels, one nested inside the other.

The last panels to be installed will be on the first bay of the system, the Front Support. These panels lap the rearward panel and fasten to the 2nd bulkhead from the front as instructed above. The front of these panels will mount to the Front Support through the Nose Piece. Refer to Section 6 for this connection (Figure 26). Leave the Slider Bolt nuts loose until the system is almost completely assembled and installed.

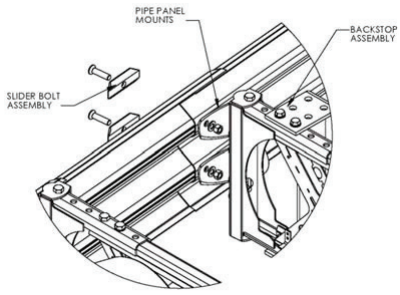

Figure 22. Attach Rear Panel

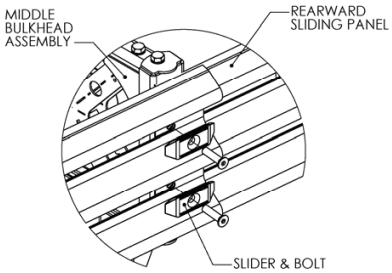

Figure 23. Attach Side Panels

STEP 6 - Attach Nose Piece / Delineation Marker

Narrow systems (up to 910mm Front Support) use a one-piece polyurethane nose (Figure 24) with molded Thriebeam corrugations on both ends. Wider Front Support Assemblies 1070mm and above) use two polyurethane parts (Figure 25) riveted together. The two part nose pieces have Thriebeam corrugations on one side and a series of holes through the flat section. Guide Cable Torque.

The Nose Piece attaches to the Front Support assembly through the Sliding Panels (Figure 26). Thick flat round washers are inserted in the mounting holes of the nose piece to limit compression of the polyurethane. Two 20mm bolts with fender washers clamp the nose piece and Sliding Panel to the Front Support on each side. Fasteners use lock washers or Locktite.

Torque to 2270 N-m. The two part nose pieces overlap across the width of the system. Adjust to desired profile and align holes. Using the supplied pop-rivets and washers, rivet two columns of holes. Rivets should pass through the overlapping nose pieces at the furthest possible columns apart (Figure 26).

Apply delineation markings as required (not supplied).

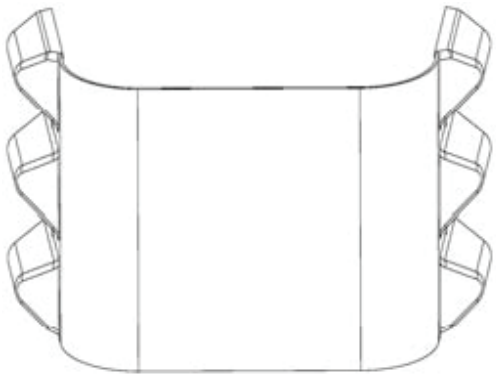

Figure 24. Nose Piece

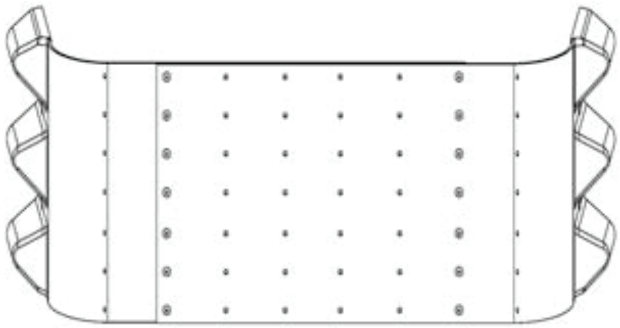

Figure 25. Nose Piece (wide)

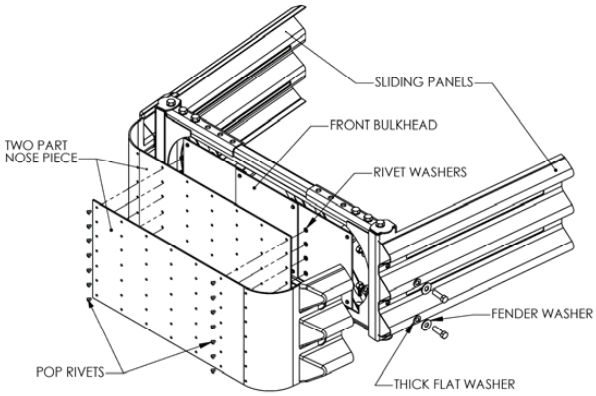

Figure 26. Wide Nose Piece Assembly

STEP 7- Install Cables and Cable Guides

Cable Location

Every system has a set of cables that run through the cable guides that attach underneath each bulkhead. The Cable Guides clamp around the cable and bolt to the bottom of the bulkheads. The Cable Guide is universal and fits all bulkhead and cable configurations. Two Cable Guide assemblies are used on every middle bulkhead assembly (Figure 27). The cables are tentioned between the Backstop and Front Cable Anchor. The Front Cable Anchor is mounted under the first bay.

IMPORTANT NOTE: The Front Support Assembly is not attached to the cable.

Systems using a PCB, Compact Backstop or Flush Mount Backstop

Systems using a PCB, Flush Mount or Compact Backstop use 25mm diameter cable (Figure 28). These Cables are identified by the loop and shackle on one end and a threaded stud swaged to the other end. (The shackle is not used on the Flush Mount Backstop).

Systems with Wide Flange Backstops

Systems with Wide Flange Backstops use a 28mm diameter cable (Figure 29). These cables have a threaded stud swaged to the rear end and a large “open swage socket” on the front end. A key is also included which limits rotation of the cable during tensioning at the Rear Cable Anchor.

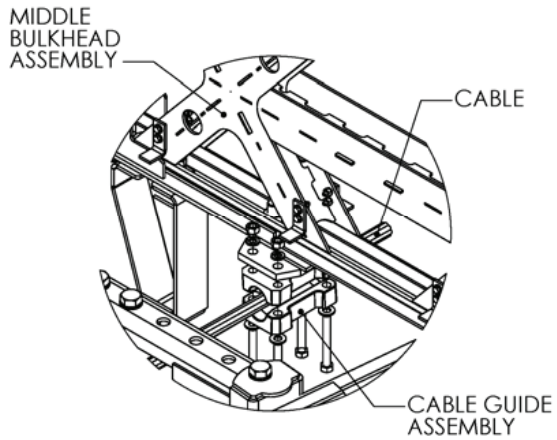

Figure 27. Cable Guide Clamp

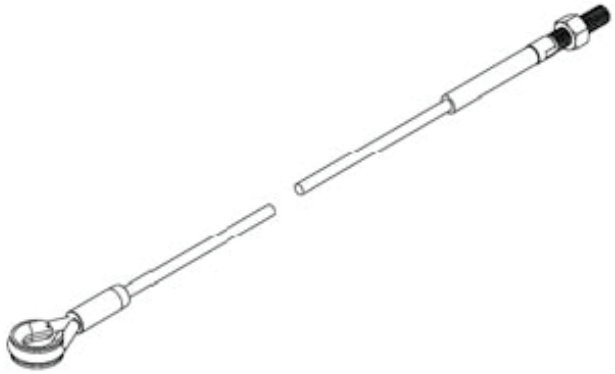

Figure 28. Compact Cable

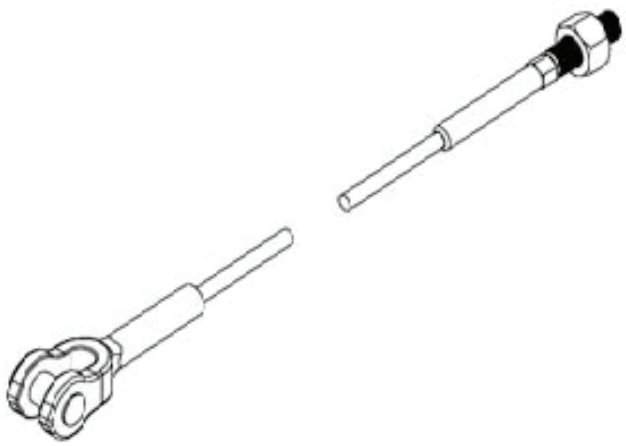

Figure 29. Universal Cable

The cables are fed through the bulkheads from the front. On parallel style bulkheads, the cables thread between the legs. On XL-XXXL bulkheads, the cables can go between the legs or through the legs, depending on the configuration. Lead with the rear of the cable. Place the rear cable end through the Rear Cable Anchor, PCB Backstop, or Compact Backstop. Start the tensioning nut with about 25mm of thread.

Without pinning the Front Cable Anchor, attach the Cable Guides to the bulkheads. Start from the last bulkhead and move forward. Cable Guides attach with 12mm hardware provided. Fasteners use lock washers or Locktite.

When all the Cable Guides are installed, pin the front cable end to the Front Cable Anchor. On Wide Flange Backstop configurations, install the Key to the Rear Cable Anchor (Figure 30).

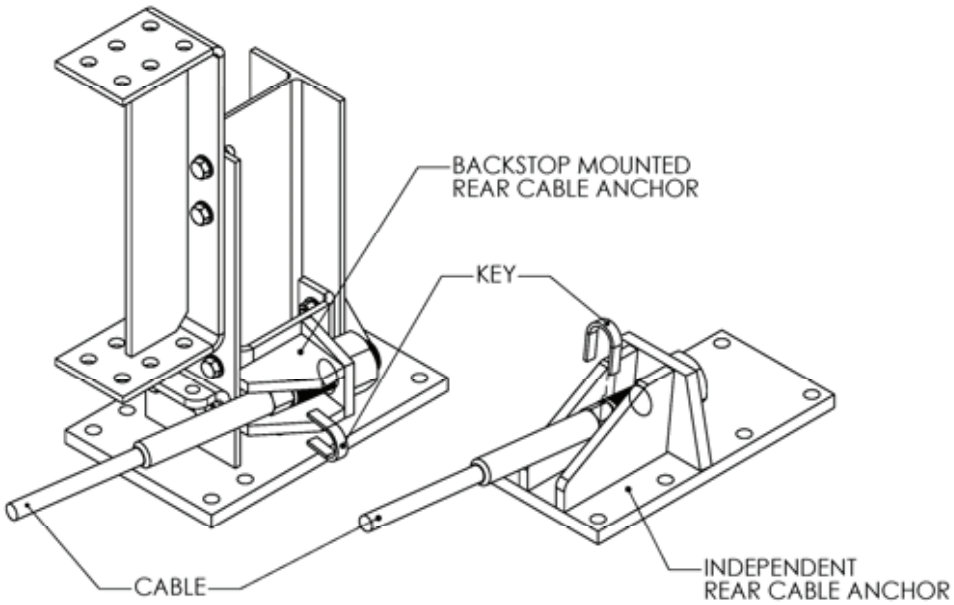

Figure 30. Backstop Cable Mount

STEP 8 - Stretch and Align the System

This step can be avoided or reduced if care is taken to align and space the bulkheads properly during assembly.

Attach a pair of chains or straps to the Front Bulkhead assembly. Using a truck or other tow vehicle, pull the system forward to fully extend the bays. The bays are fully extended when the Slider Bolts are bottomed out in the slots of the Sliding Panels.

If necessary, bump or nudge the system into alignment. Each bulkhead should be aligned along the centerline of the system.

Recommended attachment points for straps or chains are at the corners of Front Support on the top and bottom horizontal channels. When attaching to XLXXXL bulkheads, secure as close to the Wing Assembly attachment points as possible.

NOTE: Be sure not to jerk or pull on the backstop anchors before the anchoring compound has cured and the backstop is secured to the foundation.

STEP 9 - Tension Cables and Torque Slider Bolts

Tension the Cables. Torque the cables in 65N-m increments alternating between the two. Reference Torque Chart below (Table 2) for torque requirements. Use the deep socket provided.

Tighten Slider Bolts to approximately 130N-m, loosen, and then torque to 27N-m. This procedure ensures proper nesting of the panels and torque accuracy.

NOTE: Care must be taken to not over tighten the sliders. Follow the procedure outlined above.

STEP 10 - Install Lateral Support Cables

Skip this section if the system does not require a Lateral Cable Support Kit.

NOTE: Refer to the System Configuration chart in Appendix "A" to determine if Lateral Support Cables are required.

If the system requires a Lateral Cable Support Kit, the cable mounts should be installed on the last two bulkhead assemblies and the Wide Flange Backstops. Refer to Figure 9 and Figure 10 of Step 3.

The Lateral Support Cables are 12mm diameter and have a 12mm shackle on one end. There are eight (8) cable assemblies in the kit. The shackles pin to the cable mounts on the bulkheads and Wide Flange Backstops (Figure 31, 32, 33, 34, 35). The two cables from each backstop are routed to the opposite sides of the last two bulkheads (Figure 35).

These cables are attached to the cables pined to the bulkheads with cable clamps. Six cable clamps are used in series of three. Place the clamps at the furthest extents of the overlapping cables. The first cable clamp should be approximately 75mm from the cable end. Subsequent clamps should be spaced at 75mm (Figure 33).

Cables should be taught with minimal slack, but do not require tensioning. Routing above or below the main system cables is acceptable. Bundle access cable and use provided plastic wrap ties to secure the bundles to the suspended cables.

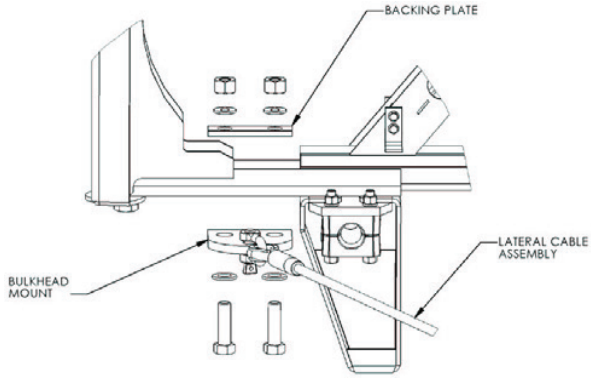

Figure 31. Lateral Support Cable

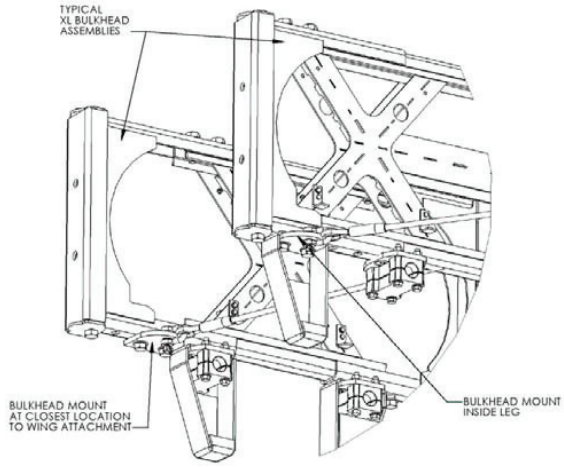

Figure 32. Lateral Support Cables

Product & Installation: TAU-II™ Crash Cushion

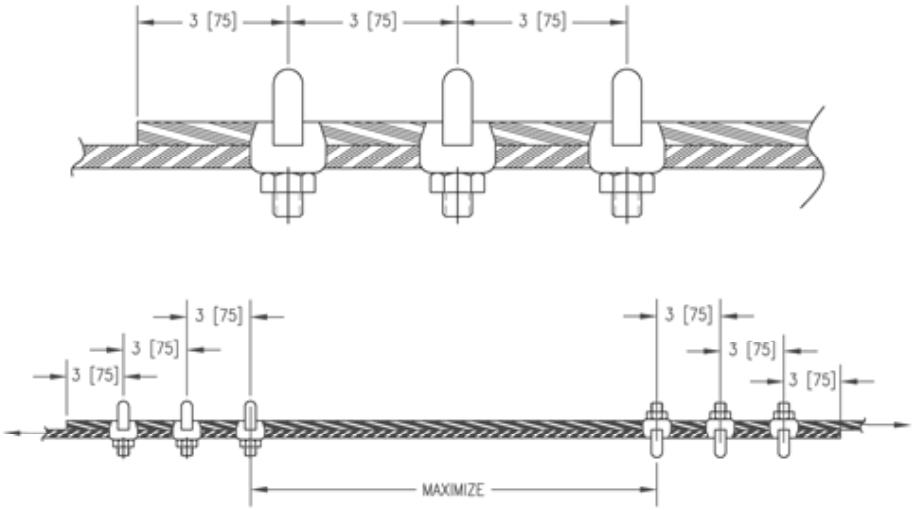

Figure 33. Install Cable Clamps

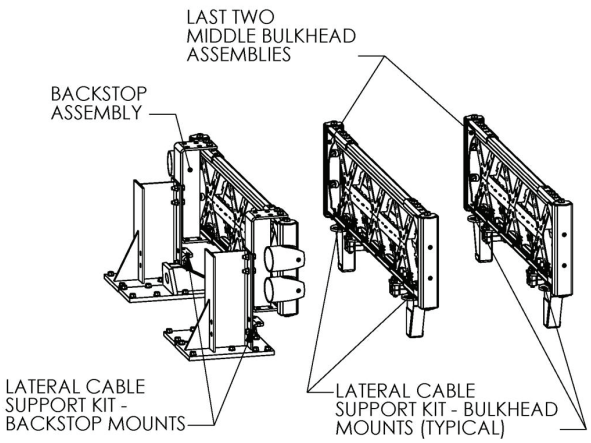

Figure 34. Cable Mounts

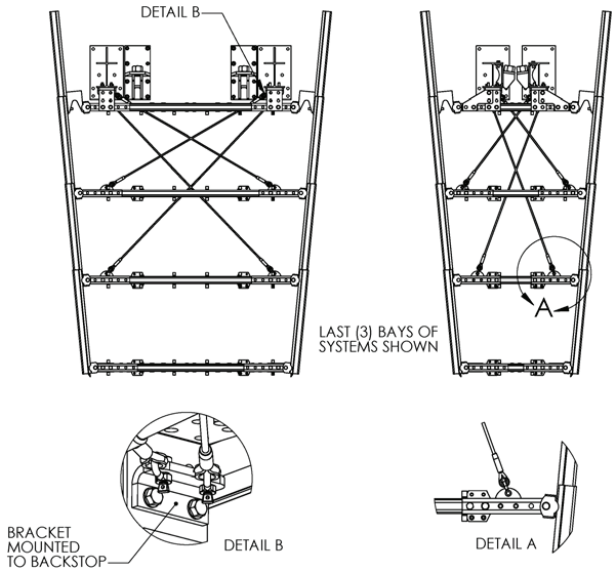

Figure 35. Install Cable Clamps

STEP 11 - Insert Energy Absorbing Cartridges

There are two types of Energy Absorbing Cartridges (EAC). Each EAC has a forward and rearward end. Type "A" EAC's (Figure 36) has eight 75mm diameter holes around the circumference of the front half of the cylinder. Type "B" EAC's (Figure 37) have a solid cylinder wall with three (3) vent holes on the rearward end.

When installing the EAC's in a system it is important to ensure that they are placed according to manufacturer specification.

NOTE: Refer the System Configuration Chart in Appendix "A" for proper EAC placement.

When placed in the system, the front of the EAC will face the front of the system (narrow end). Text on the EAC reading "This Side Up" should be legible and at the top of the inserted EAC. The EAC should rest on the EAC Locating Tabs.

Note that bays capable of holding (2) EAC's will always use (2) EAC's except in specified empty bays. They will also always be placed in the widest locations available.

NOTE: A single bay will never have more than (2) EAC's in it. Refer the System Configuration Chart in Appendix "A" for proper placement.

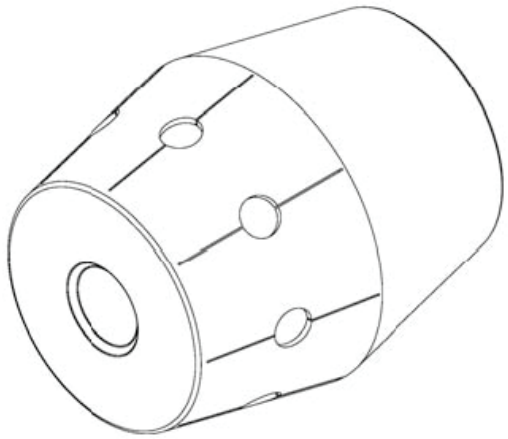

Figure 36. Energy Absorbing Cartridge – Type A

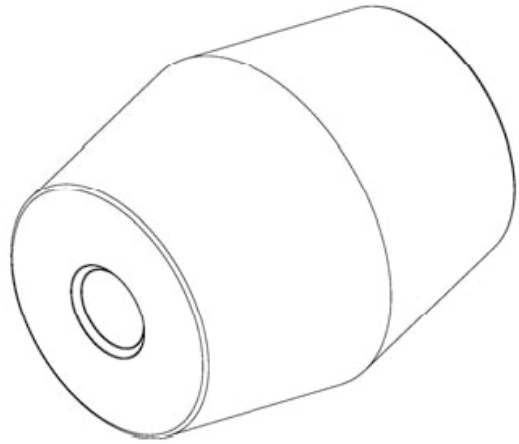

Figure 37. Energy Absorbing Cartridge – Type B

Universal TAU II Crash Cushion

Installation Checklist	Y	N
All front cable anchor plate and backstop anchor bolts in place and epoxy cured		
Clevis and pin, mounted to the front cable anchor, is installed with the handle portion of the pin on the inside of the anchor assembly, firmly tightened		
All cable guide assemblies securely fastened		
System cables tightened to meet torque specifications		
Pipe panel mounts positioned properly, flat end facing back, cut out facing forward		
Sliding panels installed properly to allow for stacking		
Sliding panels should have no more than a 19mm gap between stacked panels		
Nose cover properly installed with thick spacer and tightened to specifications		
Torque Sliding Bolt assemblies to specifications. Do NOT over tighten		
Energy Absorbing Cartridges (EAC) installed in proper A-B position and sequence. See Configuration Chart		
EAC air discharge holes positioned properly. Rotate cast ID to the top of cartridge		
Torque all fasteners to meet specifications		

Notes:

Location:			
Installed by:		Date:	
Inspected by:		Date:	

Contact ACP for more information on this or other road safety products

New South Wales Sydney 02 8708 4400 | Victoria Melbourne 03 8773 5300 | Queensland Brisbane 07 3442 6200 | Western Austalia Perth 02 8708 4400 | www.acprod.com.au

APPENDIX A – System Configuration Chart

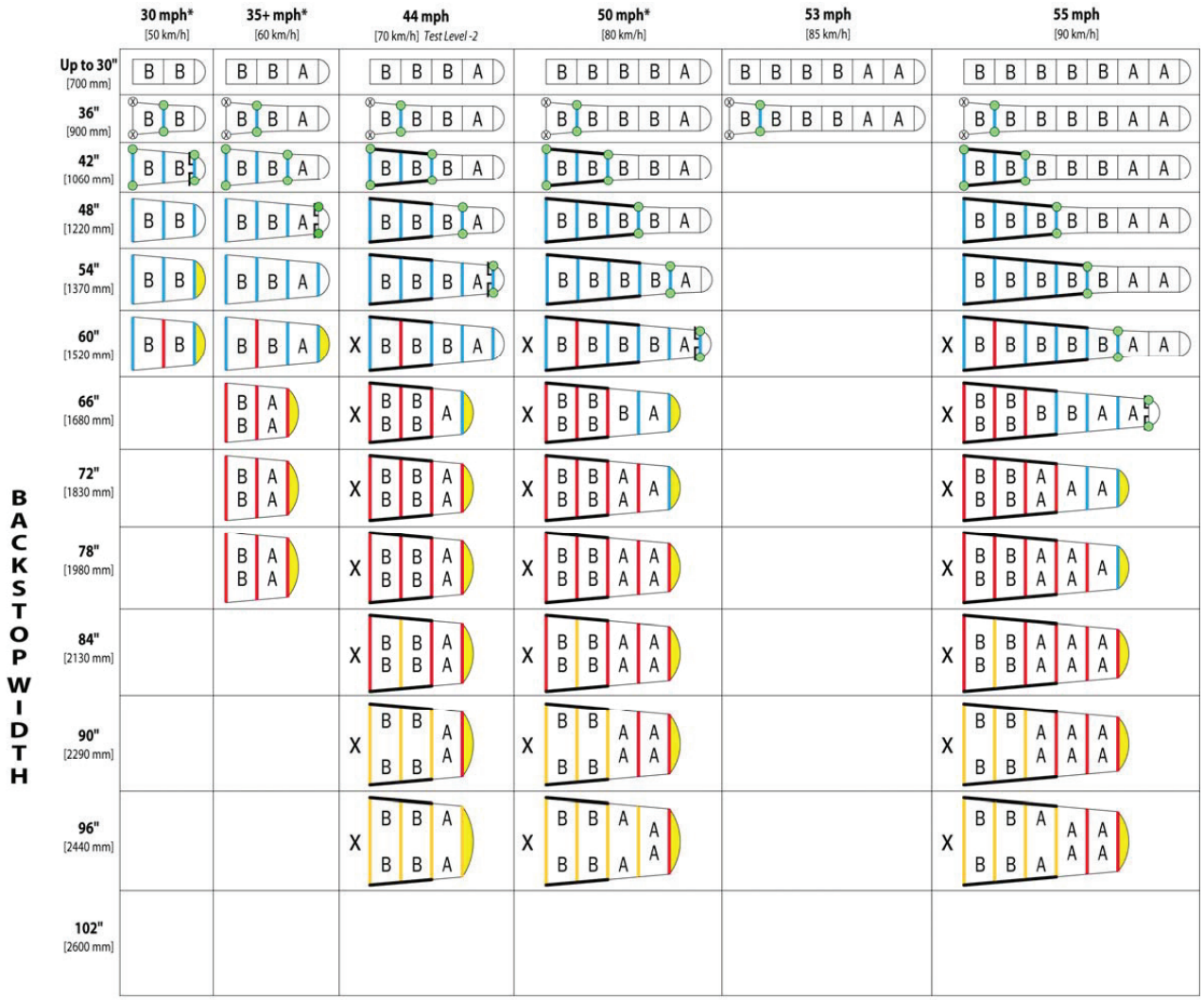

Legend:

- X Lateral Support Cables Required
- Double Slider Panels
- Single Slider Panel
- L Leg Adapter Required
- Single X Bulkhead (XL)
- Double X Bulkhead (XXL)
- Triple X Bulkhead (XXXL)
- Parallel Diaphragm
- Nose Piece
- A Type A Energy Absorbing Cartridge
- B Type B Energy Absorbing Cartridge
- Transition Wing Assembly Required
- Ⓧ 36" Adapter Assembly Required
- Wide Nose Piece

* Speed Capacity rounded down to nearest 5 mph level. Contact Customer service for further information.

Product & Installation: TAU-II™ Crash Cushion

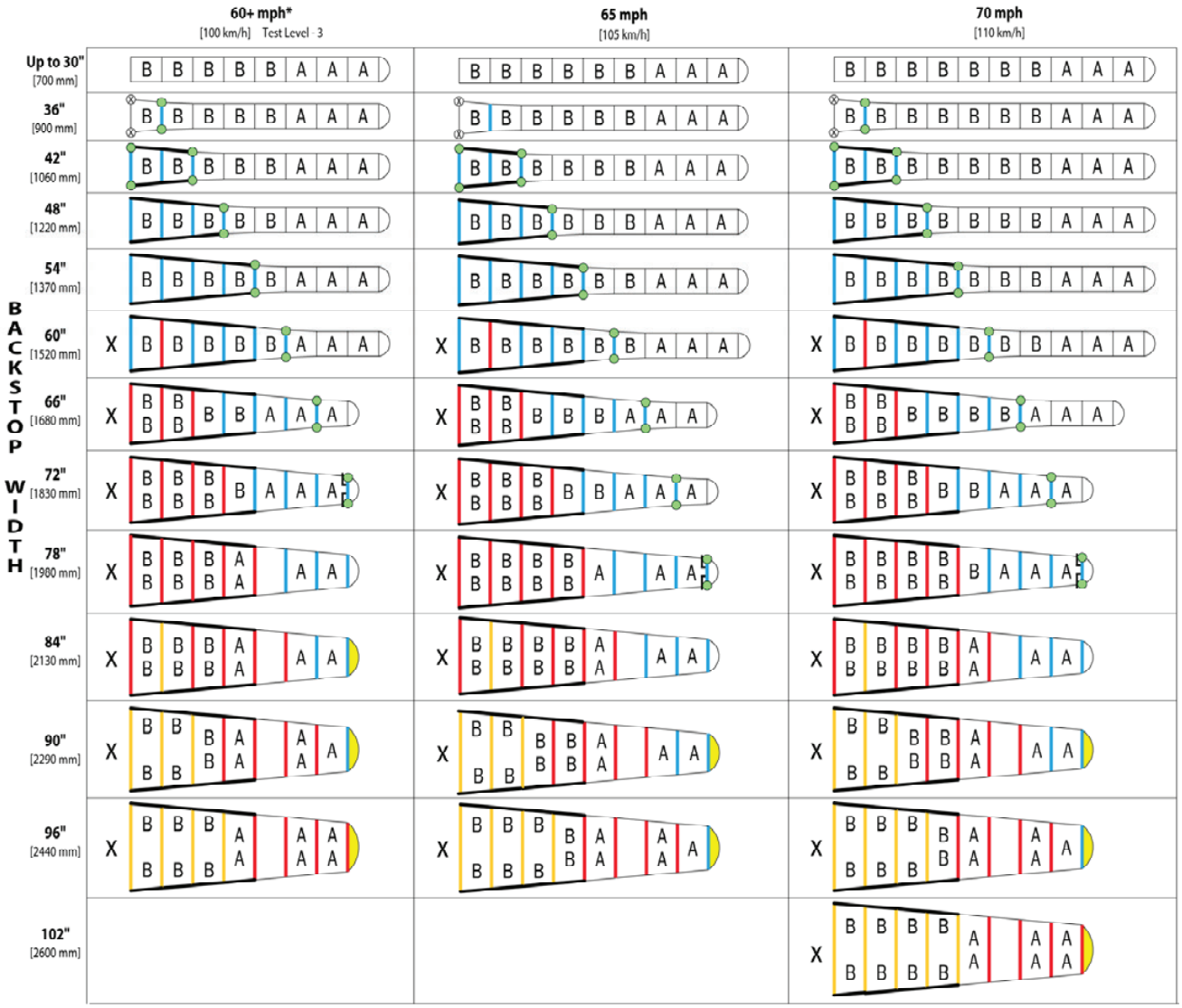

Additional High Speed Systems

72 mph
[115 km/h]

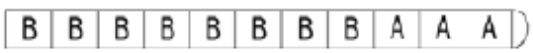

75 mph
[120 km/h]

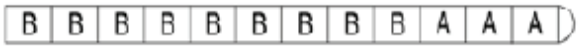

For additional information on the TAU-II® System please call **ACP on 02 8708 4400 or go to www.acprod.com.au**

APPENDIX B - System Torque Chart

Concrete Installation

Compact Backstop Anchors	160N-m
PCB Backstop Anchors	160N-m
Cable Anchor (Rear)	160N-m
Cable Anchor (Front)	160N-m
Cable Adj. Eye Bolt	675N-m

System Component Installation

Sliding Bolt Assembly	27N-m
Front Panel Holding Nose Cover	270N-m
Pipe Panel Mount to Backstop	95N-m
Cable Guide Bolts	48N-m

The Universal TAU-II® Crash Cushion has been successfully tested in various configurations having the cable torque ranging from 160N-m for asphalt installation, to 500 ft-lbs of torque for concrete applications. The system will function properly under this full range of torque. If a torque wrench is not available, refer to the table below for an alternate method of reaching the desired torque range.

Ways of creating approximately 500 ft-lbs of torque:

- 1. 8m wrench extension with entire weight of 45kg applied 12” from the end
- 1.1m wrench extension with entire weight of 90kg applied 12” from the end ·
- Use free weights or human weight

These methods should ensure torque within tested range and manufacturer tolerances.

APPENDIX C - Anchoring Foundation Options

There are three approved anchoring foundation configurations for the TAU-II® system. The first method utilises a solid concrete pad over the length of the system. The second utilises concrete blocks at the Backstop and Front Cable Anchor locations. The third is on Asphaltic Concrete foundation.

(Variations of these foundations may be reviewed and determinations made as to equivalence by the Project Engineer.)

There are different foundation configurations depending on which backstop you are using (Compact or P.C.B.). Foundation options for both of the Backstop systems are shown in the following drawings.

Drawings

Foundation Specifications, DWG# A040113 — Page 53

PCB Backstop, DWG# A040105 — Page 54

PCB Backstop – PCC Block, DWG# A040117 — Page 55

Asphalt with PCB Backstop, DWG# S040112 — Page 56

Compact Backstop, DWG# A040102 — Page 57

Flush Mount Backstop – PCC Pad, DWG# A040420 — Page 58

Compact Backstop, PCC Blocks, DWG# A040115 — Page 59

Asphalt with Compact Backstop, DWG# A040110 — Page 60

Wide Flange Backstop, DWG# A040108 — Page 61

Metric Units — Page 62-63

Product & Installation: TAU-II™ Crash Cushion

FOUNDATION SPECIFICATIONS:

THE TAU-II CRASH CUSHION SYSTEM HAS BEEN DESIGNED TO ATTACH TO CONCRETE OR ASPHALT FOUNDATIONS. USE THE ANCHORAGE SPECIFIED BELOW DEPENDING ON THE FOUNDATION AT THE JOB SITE. REFERENCE UNIVERSAL TAU-II FOUNDATION DRAWINGS FOR FURTHER DETAIL.

MATERIAL SPECIFICATIONS

1.) CONCRETE PAD

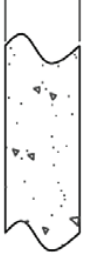

FOUNDATION: MINIMUM 6 IN. [150 mm] REINFORCED PCC PAD OR 8 IN. [200 mm] NONREINFORCED PCC PAD

ANCHORAGE: 3/4 IN. [20 mm] X 8 1/4 IN. [210 mm] GALVANIZED ANCHOR WITH 6 IN. [150 mm] EMBEDMENT

2.) ASPHALT OVER SUBBASE

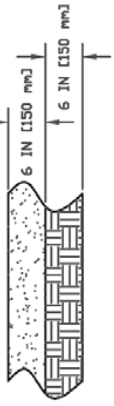

FOUNDATION: MINIMUM 6 IN [150 mm] AC OVER 6 IN. [150 mm] COMPACTED DGA SUBBASE

ANCHORAGE: 3/4 IN. [20 mm] X 18 IN. [460 mm] GALVANIZED ANCHORS WITH 16 IN. [410 mm] EMBEDMENT

ASPHALT ANCHORING KIT REQUIRED

3.) ASPHALT ONLY

FOUNDATION: MINIMUM 8 IN. [200 mm] AC

ANCHORAGE: 3/4 IN. [20 mm] X 18 IN. [460 mm] GALVANIZED ANCHORS WITH 16 IN. [410 mm] EMBEDMENT

ASPHALT ANCHORING KIT REQUIRED

4.) ASPHALT OVER P.C. CONCRETE

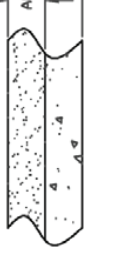

FOUNDATION: AC OVER PCC.

ANCHORAGE: 3/4 IN. [20 mm] GALVANIZED ANCHORS WITH MINIMUM 6 IN. [150 mm] EMBEDMENT IN PCC - ASPHALT ANCHORING KIT NOT REQUIRED
OR
IF 6 IN. [150 mm] EMBEDMENT IN PCC IS NOT POSSIBLE USE 3/4 IN. [20 mm] X 18 IN. [460 mm] GALVANIZED ANCHORS WITH 16 IN. [410 mm] EMBEDMENT - ASPHALT ANCHORING KIT REQUIRED

PORTLAND CEMENT CONCRETE (PCC)

STONE AGGREGATE CONCRETE MIX, 4,000 PSI [28 MPa] MINIMUM COMPRESSIVE STRENGTH (SAMPLING PER ASTM C31-84 OR ASTM C42-84A, TESTING PER ASTM C39-84)

ASPHALTIC CONCRETE (AC)

AR-4000 A.C. (PER ASTM D3381 '83), .75" MAXIMUM, MEDIUM (TYPE A OR B) AGGREGATE

SIEVE SIZE	% PASSING
1"	100
3/4"	95-100
3/8"	65-80
No. 4	49-54
No. 8	36-40
No. 30	18-21
No. 200	3-8

COMPACTED SUBBASE (DGA)

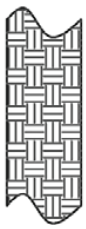

6 IN. [150 mm] MINIMUM DEPTH, 95% COMPACTION, CLASS 2 AGGREGATE

SIEVE SIZE	% PASSING
3"	100
2 1/2"	90-100
No. 4	40-90
No. 200	0-25

REV.	CHANGES	DATE	BY	REQ'D	NEXT ASSY.	ITEM
A	SEE ECN 00589	03/02/04	GAD			

SCALE: FULL

	DATE	INIT.
DRAWN BY	01/09/04	GAD
APPR'D BY		JSM

Standard Tolerance
Angular ± 1/2°
Fractional ± 1/16
Dec .XXX= ± .010
Dec .XX= ± .030

TITLE :
FOUNDATION SPECIFICATIONS

MODEL	DRAWING NUMBER	REV.
	A040113	A

Product & Installation: TAU-II™ Crash Cushion

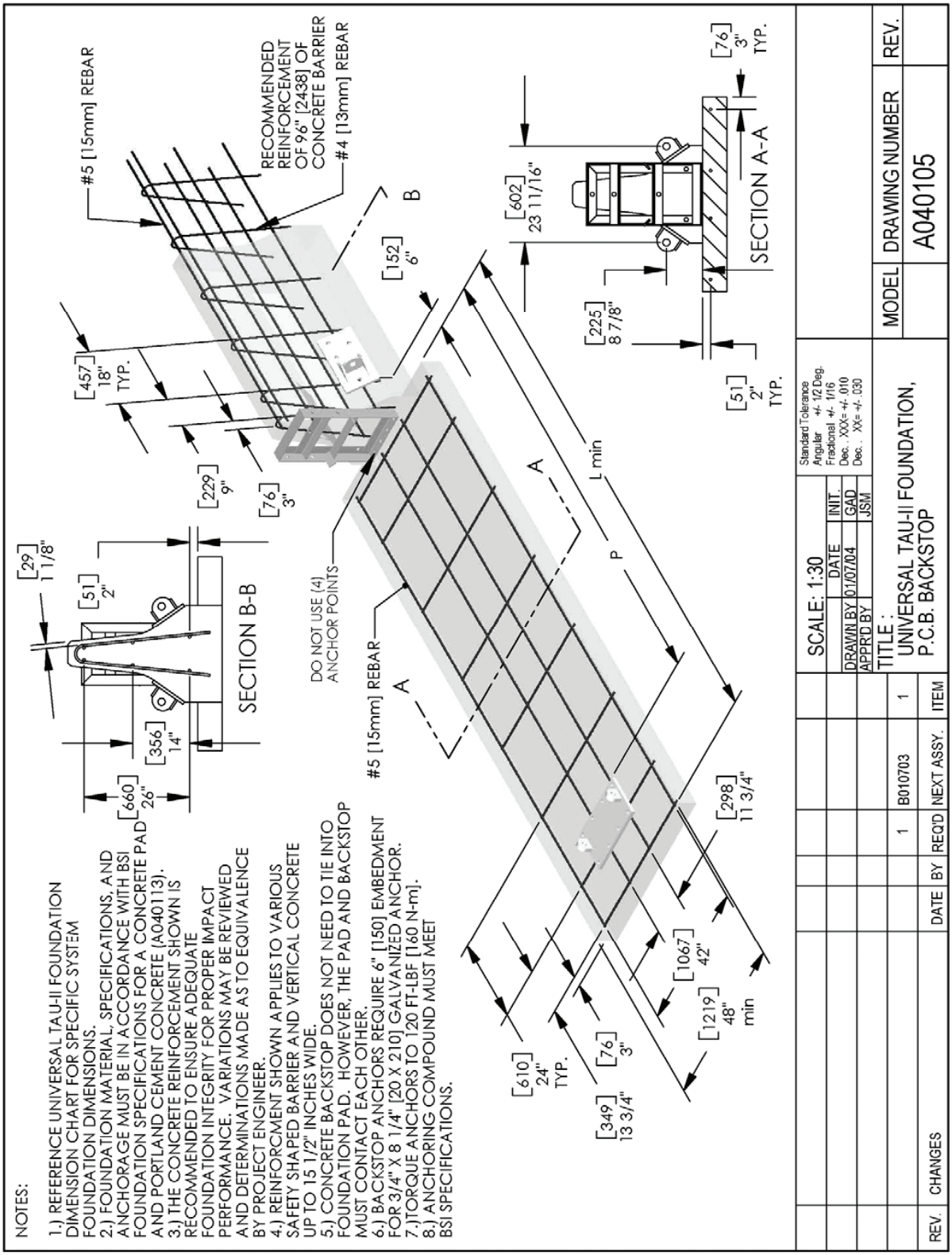

Product & Installation: TAU-II™ Crash Cushion

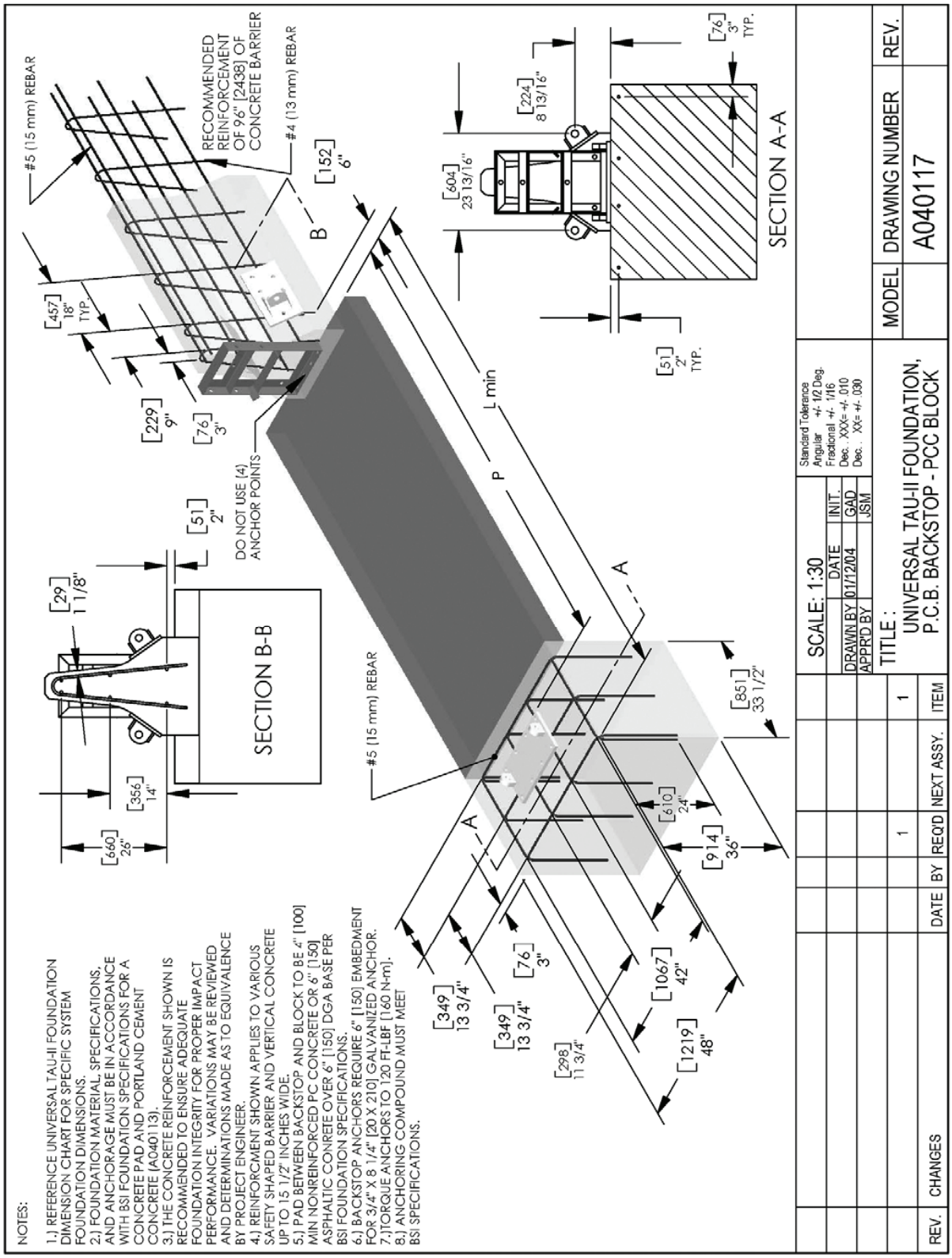

Product & Installation: TAU-II™ Crash Cushion

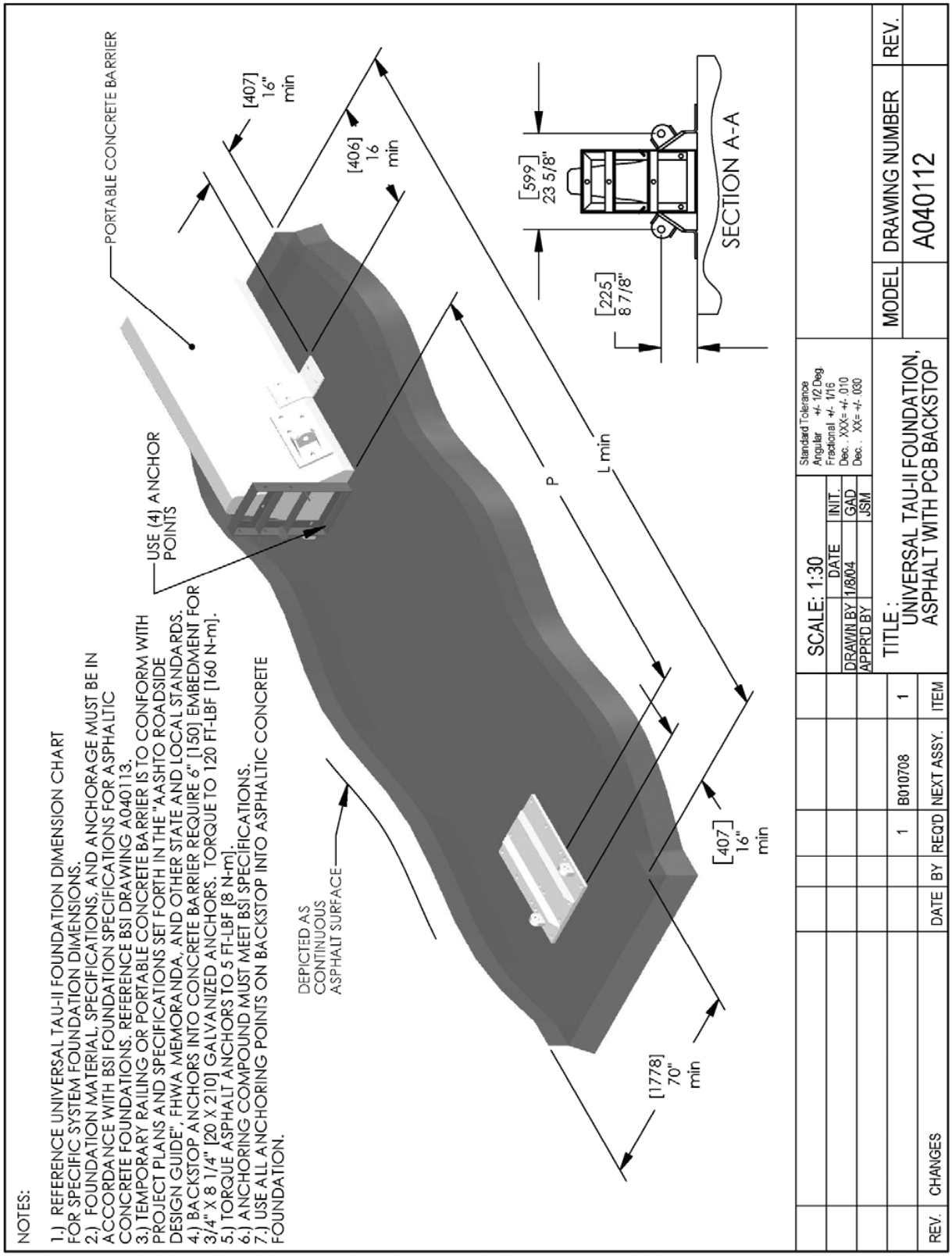

Product & Installation: TAU-II™ Crash Cushion

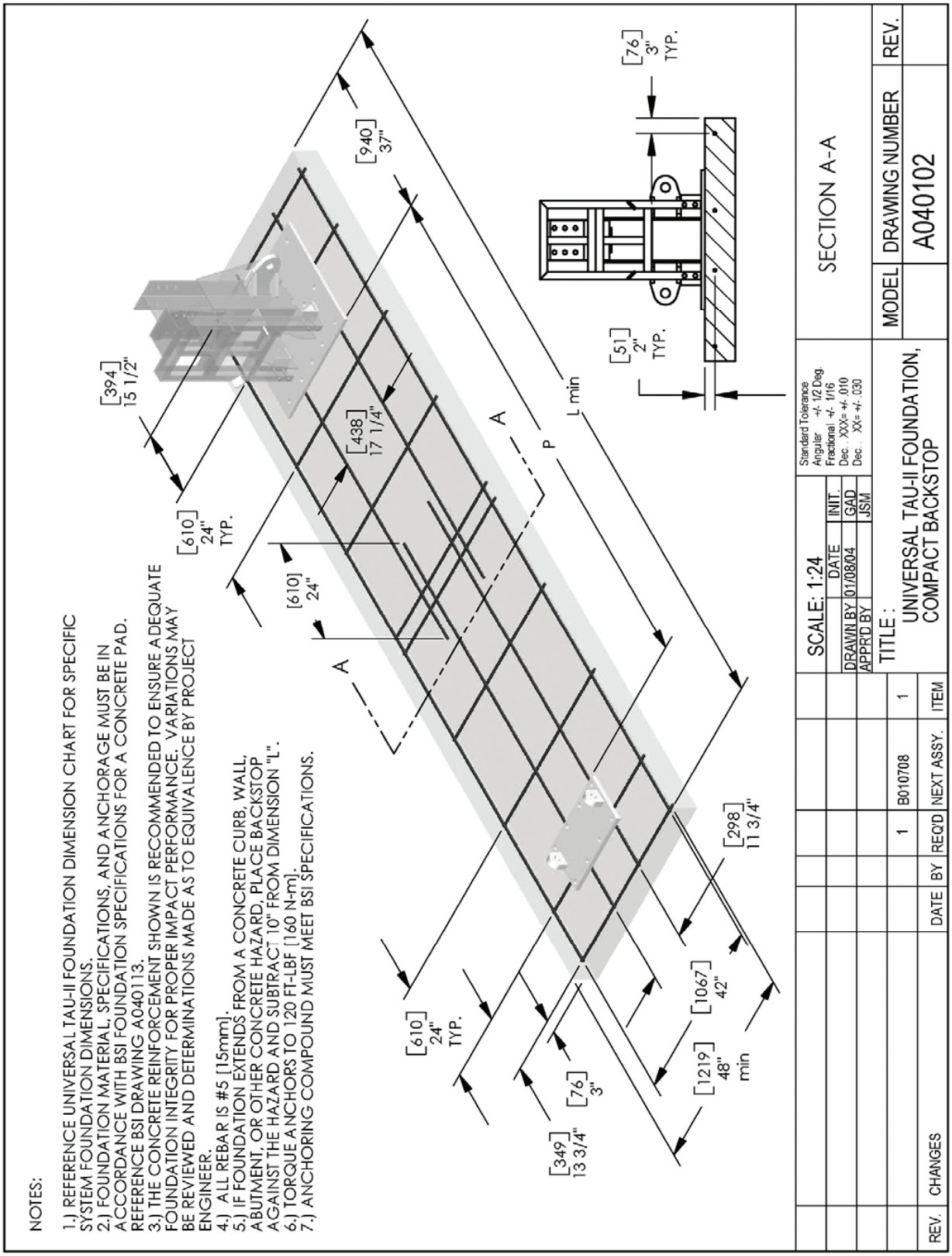

Product & Installation: TAU-II™ Crash Cushion

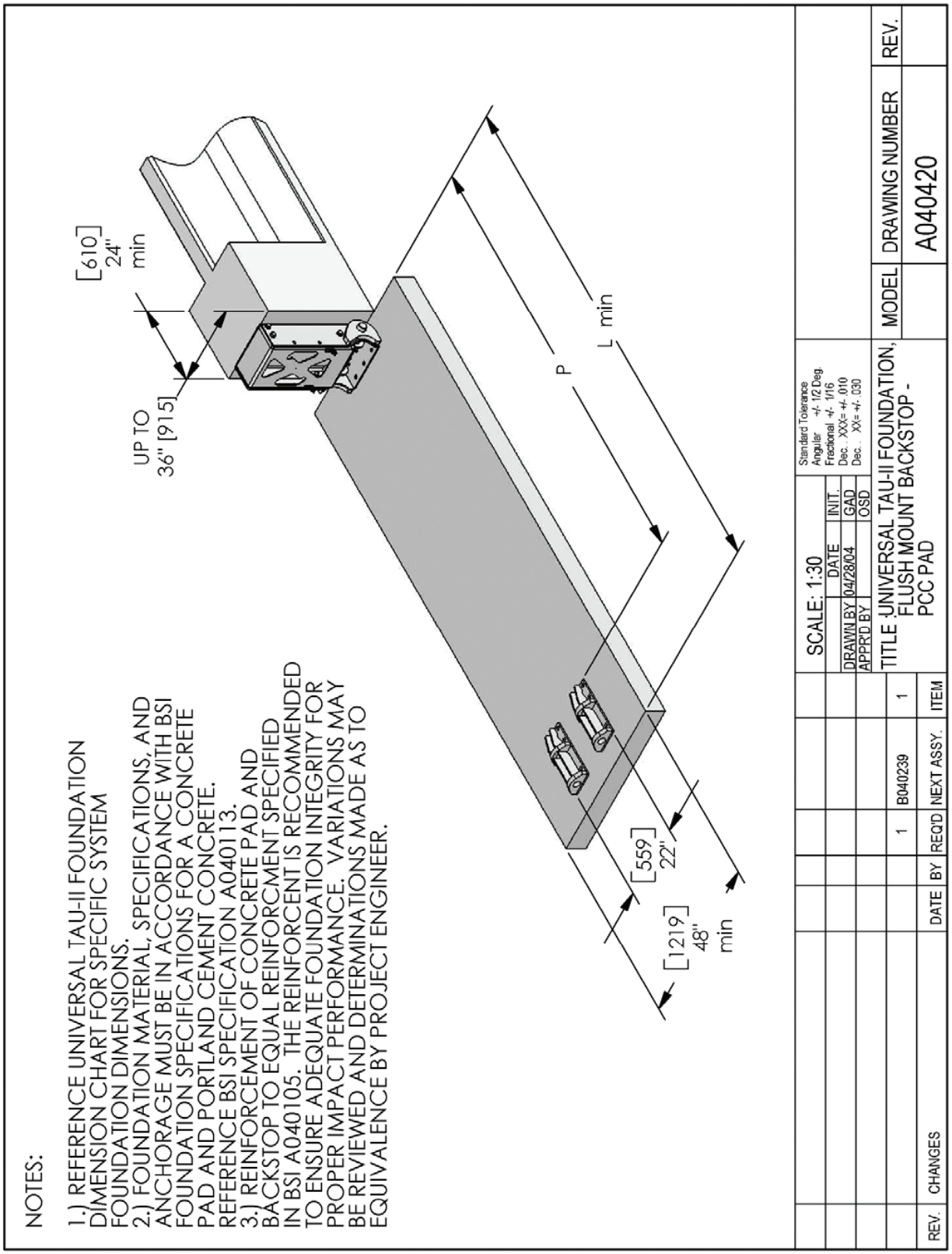

Product & Installation: TAU-II™ Crash Cushion

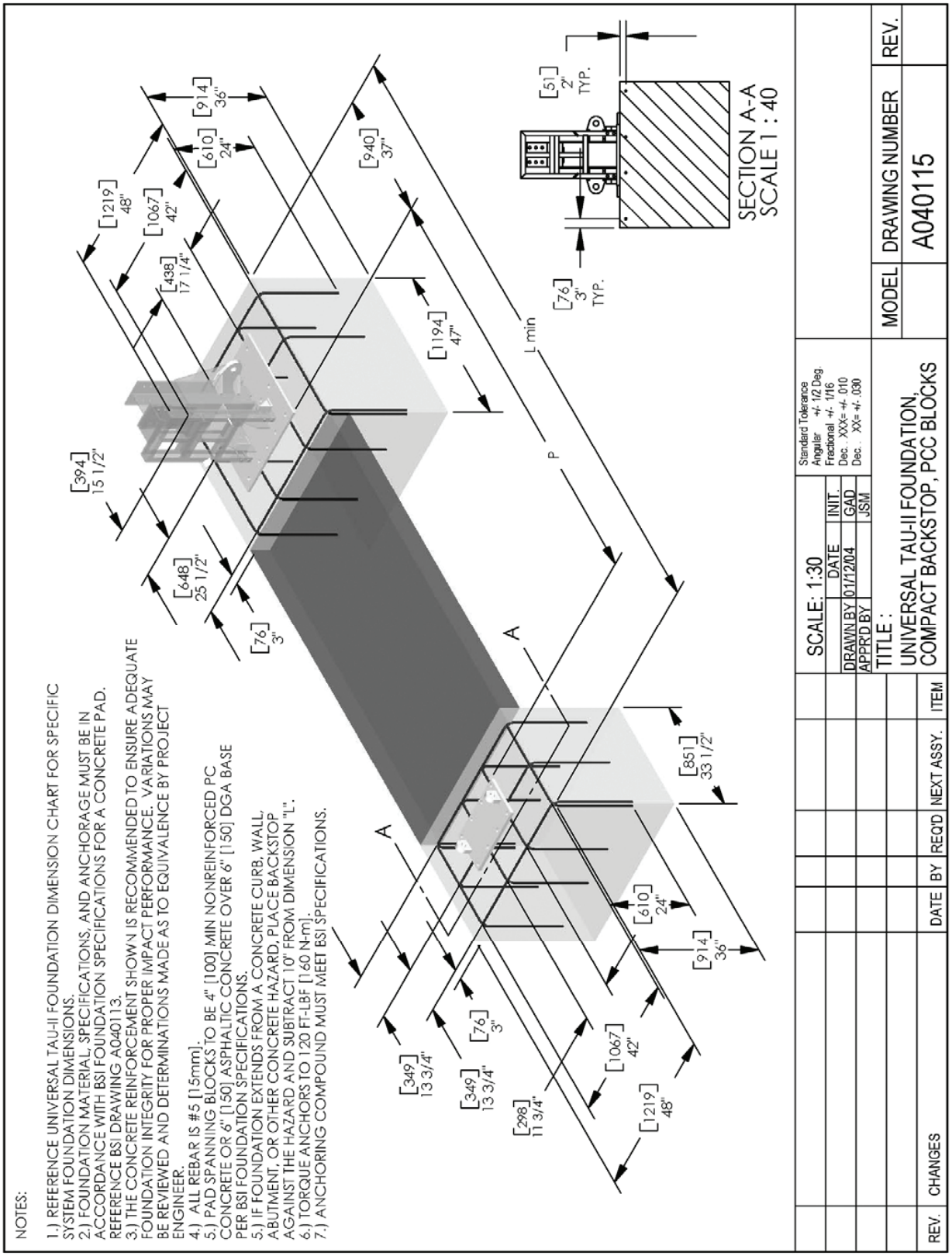

Product & Installation: TAU-II™ Crash Cushion

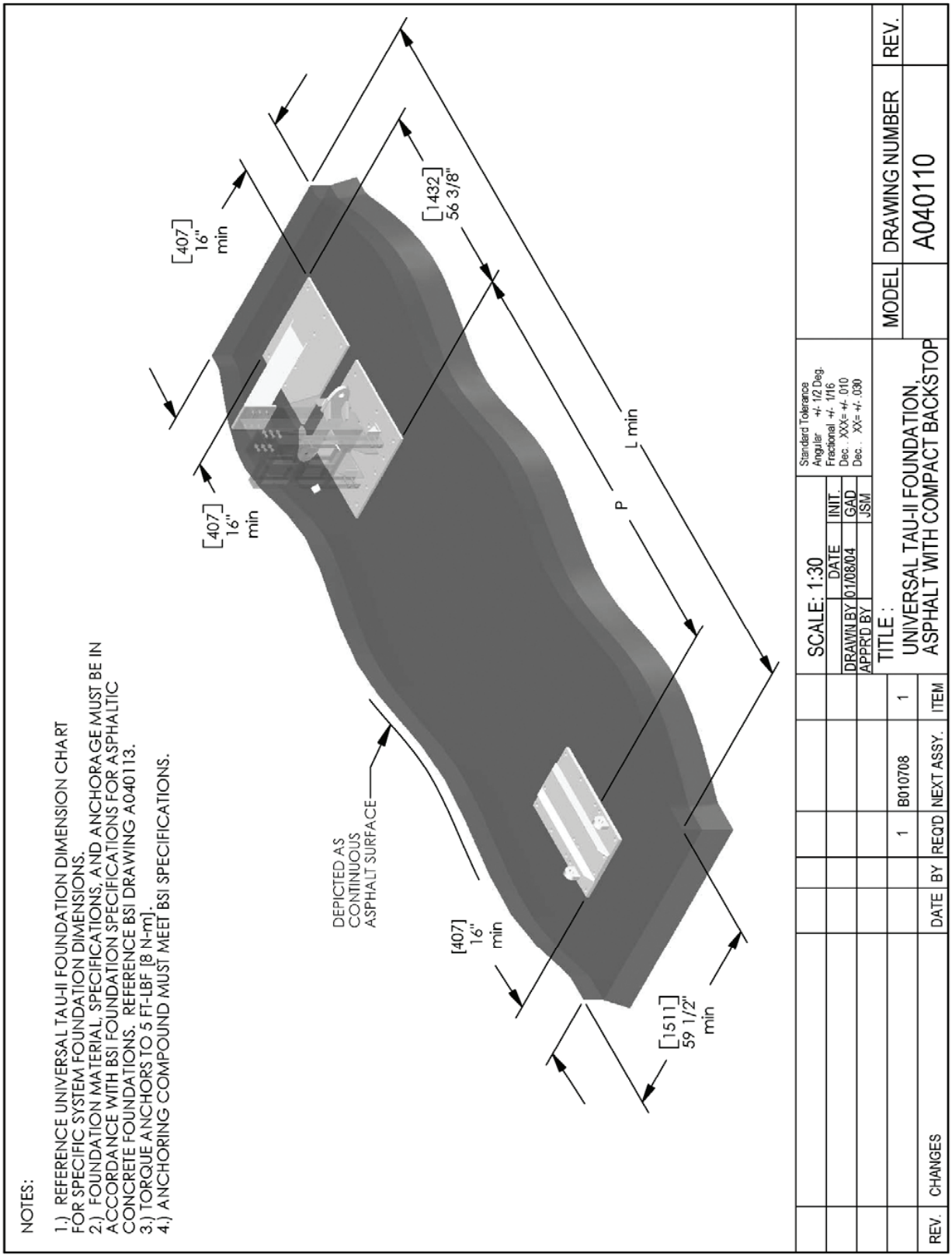

Product & Installation: TAU-II™ Crash Cushion

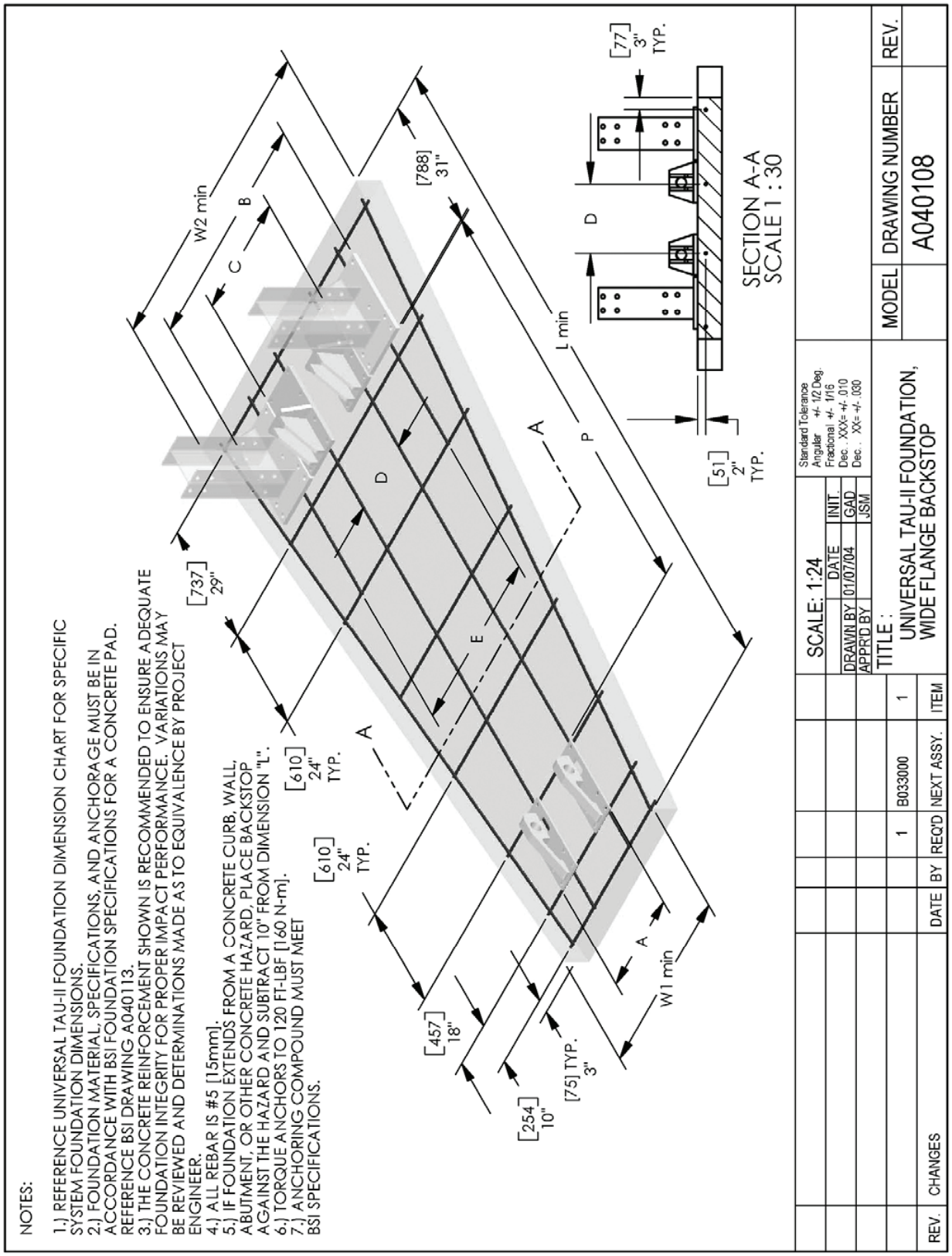

Product & Installation: TAU-II™ Crash Cushion

UNIVERSAL TAU-II FOUNDATION DIMENSIONS

METRIC UNITS - MILLIMETERS

SYSTEM WIDTH (mm)	SYSTEM SPEED CAPACITY (KPH) 50	60	70 TL-2	80	85	90	100 TL-3	105	110	115	120	DRAWING NUMBER
UP TO 760mm PCB BACKSTOP	30T050PBC	30T060PBC	30T070PBC	30T080PBC	30T085PBC	30T090PBC	30T100PBC	30T105PBC	30T110PBC	30T115PBC	30T120PBC	A040105 A040117
	30T050PYC	30T060PYC	30T070PYC	30T080PYC	30T085PYC	30T090PYC	30T100PYC	30T105PYC	30T110PYC	30T115PYC	30T120PYC	
L (mm)	2172	3035	3912	4775	5639	6502	7379	8242	9106	9970	10833	
P (mm)	1594	2461	3327	4194	5061	5928	6795	7661	8528	9395	10262	
UP TO 760mm COMPACT BACKSTOP	30T050CBC	30T060CBC	30T070CBC	30T080CBC	30T085CBC	30T090CBC	30T100CBC	30T105CBC	30T110CBC	30T115CBC	30T120CBC	A040102 A040115
	30T050CYC	30T060CYC	30T070CYC	30T080CYC	30T085CYC	30T090CYC	30T100CYC	30T105CYC	30T110CYC	30T115CYC	30T120CYC	
L (mm)	2934	3797	4661	5525	6401	7264	8128	8991	9868	10732	11595	
P (mm)	1410	2276	3143	4010	4877	5744	6610	7477	8344	9211	10077	
UP TO 760mm ASPHALT PCB BACKSTOP	30T050PBA	30T060PBA	30T070PBA	30T080PBA	30T085PBA	30T090PBA	30T100PBA	30T105PBA	30T110PBA	30T115PBA	30T120PBA	A040112
	30T050PYA	30T060PYA	30T070PYA	30T080PYA	30T085PYA	30T090PYA	30T100PYA	30T105PYA	30T110PYA	30T115PYA	30T120PYA	
L (mm)	3550	4413	5290	6153	7017	7880	8757	9620	10484	11347	12211	
P (mm)	1594	2461	3327	4194	5061	5928	6795	7661	8528	9395	10262	
UP TO 760mm ASPHALT COMPACT BACKSTOP	30T050CBA	30T060CBA	30T070CBA	30T080CBA	30T085CBA	30T090CBA	30T100CBA	30T105CBA	30T110CBA	30T115CBA	30T120CBA	A040110
	30T050CYA	30T060CYA	30T070CYA	30T080CYA	30T085CYA	30T090CYA	30T100CYA	30T105CYA	30T110CYA	30T115CYA	30T120CYA	
L (mm)	3975	4839	5702	6566	7442	8306	9169	10033	10909	11773	12637	
P (mm)	1410	2276	3143	4010	4877	5744	6610	7477	8344	9211	10077	
915mm PCB BACKSTOP	36T050PBC	36T060PBC	36T070PBC	36T080PBC	36T085PBC	36T090PBC	36T100PBC	36T105PBC	36T110PBC	36T115PBC	36T120PBC	A040105 A040117
	36T050PYC	33T060PYC	36T070PYC	36T080PYC	36T085PYC	36T090PYC	36T100PYC	36T105PYC	36T110PYC	36T115PYC	36T120PYC	
L (mm)	2172	3035	3912	4775	5639	6502	7379	8242	9106	9970	10833	
P (mm)	1594	2461	3327	4194	5061	5928	6795	7661	8528	9395	10262	
915mm COMPACT BACKSTOP	36T050CBC	36T060CBC	36T070CBC	36T080CBC	36T085CBC	36T090CBC	36T100CBC	36T105CBC	36T110CBC	36T115CBC	36T120CBC	A040102 A040115
	36T050CYC	36T060CYC	36T070CYC	36T080CYC	36T085CYC	36T090CYC	36T100CYC	36T105CYC	36T110CYC	36T115CYC	36T120CYC	
L (mm)	2934	3797	4661	5525	6401	7264	8128	8991	9868	10732	11595	
P (mm)	1410	2276	3143	4010	4877	5744	6610	7477	8344	9211	10077	
915mm ASPHALT PCB BACKSTOP	36T050PBA	36T060PBA	36T070PBA	36T080PBA	36T085PBA	36T090PBA	36T100PBA	36T105PBA	36T110PBA	36T115PBA	36T120PBA	A040112
	36T050PYA	36T060PYA	36T070PYA	36T080PYA	36T085PYA	36T090PYA	36T100PYA	36T105PYA	36T110PYA	36T115PYA	36T120PYA	
L (mm)	3550	4413	5290	6153	7017	7880	8757	9620	10484	11347	12211	
P (mm)	1594	2461	3327	4194	5061	5928	6795	7661	8528	9395	10262	
915mm ASPHALT COMPACT BACKSTOP	36T050CBA	36T060CBA	36T070CBA	36T080CBA	36T085CBA	36T090CBA	36T100CBA	36T105CBA	36T110CBA	36T115CBC	36T120CBC	A040110
	36T050CYA	36T060CYA	36T070CYA	36T080CYA	36T085CYC	36T090CYA	36T100CYA	36T105CBC	36T110CYA	36T115CYA	36T120CYA	
L (mm)	3975	4839	5702	6566	7442	8306	9169	10033	10909	11773	12637	
P (mm)	1410	2276	3143	4010	4877	5744	6610	7477	8344	9211	10077	
UP TO 915mm PCC PAD FLUSH MOUNT BACKSTOP	36T050FBC	36T060FBC	36T070FBC	36T080FBC	36T085FBC	36T090FBC	36T100FBC	36T105FBC	36T110FBC	36T115FBC	36T120FBC	A040420
	36T050FYC	36T060FYC	36T070FYC	36T080FYC	36T085FYC	36T090FYC	36T100FYC	36T105FYC	36T110FYC	36T115FYC	36T120FYC	
L (mm)	2121	2985	3848	4712	5588	6452	7315	8179	9055	9919	10782	
P (mm)	1511	2375	3239	4102	4978	5842	6706	7569	8446	9309	10173	
1070mm WF BACKSTOP	42T050WBC	42T060WBC	42T070WBC	42T080WBC		42T090WBC	42T100WBC	42T105WBC	42T110WBC			A040108
	42T050WYC	42T060WYC	42T070WYC	42T080WYC		42T090WYC	42T100WYC	42T105WYC	42T110WYC			
L (mm)	3175	4039	4902	5766		7493	8357	9220	10084			
W1 (mm)	1118	1118	1118	1118		1118	1118	1118	1118			
W2 (mm)	1295	1295	1295	1295		1295	1295	1295	1295			
P (mm)	1651	2515	3378	4242		5969	6833	7696	8560			
A (mm)	559	559	559	559		559	559	559	559			
B (mm)	787	787	787	787		787	787	787	787			
C (mm)	NA	NA	NA	NA		NA	NA	NA	NA			
D (mm)	406	406	406	406		406	406	406	406			
E (mm)	NA	NA	NA	NA		NA	NA	NA	NA			

Product & Installation: TAU-II™ Crash Cushion

SYSTEM WIDTH (mm)	SYSTEM SPEED CAPACITY (KPH)											DRAWING NUMBER
	50	60	70 TL-2	80	85	90	100 TL-3	105	110	115	120	
1220mm WF BACKSTOP	**48T050WBC**	**48T060WBC**	**48T070WBC**	**48T080WBC**		**48T090WBC**	**48T100WBC**	**48T105WBC**	**48T110WBC**			**A040108**
	48T050WYC	**48T060WYC**	**48T070WYC**	**48T080WYC**		**48T090WYC**	**48T100WYC**	**48T105WYC**	**48T110WYC**			
L (mm)	3175	4039	4902	5766		7493	8357	9220	10084			
W1 (mm)	1118	1118	1118	1118		1118	1118	118	1118			
W2 (mm)	1295	1295	1295	1295		1295	1295	1295	1295			
P (mm)	1651	2515	3378	4242		5969	6833	7696	8560			
A (mm)	559	559	559	559		559	559	559	559			
B (mm)	787	787	787	787		787	787	787	787			
C (mm)	NA	NA	NA	NA		NA	NA	NA	NA			
D (mm)	406	406	406	406		406	406	406	406			
E (mm)	NA	NA	NA	NA		NA	NA	NA	NA			
1370mm WF BACKSTOP	**54T050WBC**	**54T060WBC**	**54T070WBC**	**54T080WBC**		**54T090WBC**	**54T100WBC**	**54T105WBC**	**54T110WBC**			**A040108**
	54T050WYC	**54T060WYC**	**54T070WYC**	**54T080WYC**		**54T090WYC**	**54T100WYC**	**54T105WYC**	**54T110WYC**			
L (mm)	3175	4039	4902	5766		7493	8357	9220	10084			
W1 (mm)	1118	1118	1118	1118		1118	1118	118	1118			
W2 (mm)	1295	1295	1295	1295		1295	1295	1295	1295			
P (mm)	1651	2515	3378	4242		5969	6833	7696	8560			
A (mm)	559	559	559	559		559	559	559	559			
B (mm)	787	787	787	787		787	787	785	787			
C (mm)	NA	NA	NA	NA		NA	NA	NA	NA			
D (mm)	406	406	406	406		406	406	406	406			
E (mm)	NA	NA	NA	NA		NA	NA	NA	NA			
1525mm WF BACKSTOP	**60T050WBC**	**60T060WBC**	**60T070WBC**	**60T080WBC**		**60T090WBC**	**60T100WBC**	**60T105WBC**	**60T110WBC**			**A040108**
	60T050WYC	**60T060WYC**	**60T070WYC**	**60T080WYC**		**60T090WYC**	**60T100WYC**	**60T105WYC**	**60T110WYC**			
L (mm)	3175	4039	4902	5766		7493	8357	9220	10084			
W1 (mm)	1118	1118	1118	1118		1118	1118	118	1118			
W2 (mm)	1295	1295	1295	1295		1295	1295	1295	1295			
P (mm)	1651	2515	3378	4242		5969	6833	7696	8560			
A (mm)	559	559	559	559		559	559	559	559			
B (mm)	787	787	787	787		787	787	787	787			
C (mm)	NA	NA	NA	NA		NA	NA	NA	NA			
D (mm)	406	406	406	406		406	406	406	406			
E (mm)	NA	NA	NA	NA		NA	NA	NA	NA			
1675mm WF BACKSTOP		**66T060WBC**	**66T070WBC**	**66T080WBC**		**66T090WBC**	**66T100WBC**	**66T105WBC**	**66T110WBC**			**A040108**
		66T060WYC	**66T070WYC**	**66T080WYC**		**66T090WYC**	**66T100WYC**	**66T105WYC**	**66T110WYC**			
L (mm)		3175	4039	4902		6629	7493	8357	9220			
W1 (mm)		1753	1118	1118		1118	1118	1118	1118			
W2 (mm)		1905	1905	1905		1905	1905	1905	1905			
P (mm)		1651	2515	3378		5105	5969	6833	7696			
A (mm)		1235	559	559		559	559	559	559			
B (mm)		1391	1391	1391		1391	1391	1391	1391			
C (mm)		NA	705	705		705	705	705	705			
D (mm)		1083	406	406		406	406	406	406			
E (mm)		NA	1060	1060		1060	1060	1060	1060			
1830mm WF BACKSTOP		**72T060WBC**	**72T070WBC**	**72T080WBC**		**72T090WBC**	**72T100WBC**	**72T105WBC**	**72T110WBC**			**A040108**
		72T060WYC	**72T070WYC**	**72T080WYC**		**72T090WYC**	**72T100WYC**	**72T105WYC**	**72T110WYC**			
L (mm)		3175	4039	4902		5766	7493	8357	8357			
W1 (mm)		1753	1753	1118		1118	1118	115	1118			
W2 (mm)		1905	1905	1905		1905	1905	1905	1905			
P (mm)		1651	2515	3378		4242	5969	6833	6833			
A (mm)		1235	1235	559		559	559	556	559			
B (mm)		1391	1391	1391		1391	1391	1391	1391			
C (mm)		NA	NA	705		705	705	705	705			
D (mm)		1083	1083	406		406	406	406	406			
E (mm)		NA	NA	1060		1060	1060	1060	1060			

Product & Installation: TAU-II™ Crash Cushion

SYSTEM WIDTH (mm)	SYSTEM SPEED CAPACITY (KPH)											DRAWING NUMBER
	50	60	70 TL-2	80	85	90	100 TL-3	105	110	115	120	
1980mm WF BACKSTOP		**78T060WBC**	**78T070WBC**	**78T080WBC**		**78T090WBC**	**78T100WBC**	**78T105WBC**	**78T110WBC**			
		78T060WYC	**78T070WYC**	**78T080WYC**		**78T090WYC**	**78T100WYC**	**78T105WYC**	**78T110WYC**			
L (mm)		3175	4039	4902		5766	7493	8357	8357			
W1 (mm)		1753	1753	1753		1118	1118	1118	1118			
W2 (mm)		1905	1905	1905		1905	1905	1905	1905			
P (mm)		1651	2515	3378		4242	5969	6833	6833			A040108
A (mm)		1235	1235	1235		559	559	559	559			
B (mm)		1391	1391	1391		1391	1391	1391	1391			
C (mm)		NA	NA	NA		705	705	705	705			
D (mm)		1083	1083	1083		406	406	406	406			
E (mm)		NA	NA	NA		1060	1060	1060	1060			
2135mm WF BACKSTOP			**84T070WBC**	**84T080WBC**		**84T090WBC**	**84T100WBC**	**84T105WBC**	**84T110WBC**			
			84T070WYC	**84T080WYC**		**84T090WYC**	**84T100WYC**	**84T105WYC**	**84T110WYC**			
L (mm)			4039	4902		5766	7493	8357	8357			
W1 (mm)			1753	1753		1753	1118	118	1118			
W2 (mm)			1905	1905		1905	1905	1905	1905			
P (mm)			2515	3378		4242	5969	6833	6833			A040108
A (mm)			1235	1235		1235	559	559	559			
B (mm)			1391	1391		1391	1391	1391	1391			
C (mm)			NA	NA		NA	705	705	705			
D (mm)			1083	1083		1083	406	406	406			
E (mm)			NA	NA		NA	1060	1060	1060			
2285mm WF BACKSTOP			**90T070WBC**	**90T080WBC**		**90T090WBC**	**90T100WBC**	**90T105WBC**	**90T110WBC**			
			90T070WYC	**90T080WYC**		**90T090WYC**	**90T100WYC**	**90T105WYC**	**90T110WYC**			
L (mm)			4039	4902		5766	7493	8357	8357			
W1 (mm)			1753	1753		1753	1118	1118	1118			
W2 (mm)			2515	2515		2515	2515	2515	2515			
P (mm)			2515	3378		4242	5969	6633	6833			A040108
A (mm)			1235	1235		1235	559	559	559			
B (mm)			1997	1997		1997	1997	1997	1997			
C (mm)			1311	1311		1311	705	705	705			
D (mm)			1083	1083		1083	406	406	406			
E (mm)			1667	1667		1667	1667	1667	1667			
2440mm WF BACKSTOP			**96T070WBC**	**96T080WBC**		**96T090WBC**	**96T100WBC**	**96T105WBC**	**96T110WBC**			
			96T070WYC	**96T080WYC**		**96T090WYC**	**96T100WYC**	**96T105WYC**	**96T110WYC**			
L (mm)			4039	4902		5766	7493	8357	8357			
W1 (mm)			2362	1753		1753	1753	118	1118			
W2 (mm)			2515	2515		2515	2515	2515	2515			
P (mm)			2515	3378		4242	5969	6833	6833			A040108
A (mm)			1845	1235		1235	1235	559	559			
B (mm)			1997	1997		1997	1997	1997	1997			
C (mm)			NA	1311		1305	1311	705	705			
D (mm)			1692	1083		1083	1083	406	406			
E (mm)			NA	1667		1667	1667	1667	1667			
2590mm WF BACKSTOP									**102T110WBC**			
									102T110WYC			
L (mm)									8357			
W1 (mm)									1753			
W2 (mm)									2515			
P (mm)									6833			A040108
A (mm)									1235			
B (mm)									1997			
C (mm)									1311			
D (mm)									1083			
E (mm)									1667			

APPENDIX D - Transitions

There are a variety of transition options available for the TAU-II® system. The system was designed to be compatible with a variety of generic transitions already available to the industry.

Placement and installation of the TAU-II® system and transitions must be accomplished in accordance with the guidelines and recommendations set forth in the "AASHTO Roadside Design Guide," FHWA memoranda and other state and local standards.

There are different transition configurations depending on which backstop you are using (Compact or P.C.B.). Transition options for either of the backstop systems are shown in the following drawings.

Drawings

PCB Backstop to Vertical Concrete, DWG# B010727 Page 66

PCB Backstop to Safety Shape PCB, DWG# B10809 Page 67

Compact Backstop to Safety Shape PCB, DWG# B010725 Page 68

Compact Backstop to Safety Shape PCB One Side, DWG# B010811 Page 69

Compact backstop to Safety shape PCB Offset, DWG# B010726 Page 70

Compact Backstop to Concrete End Shoe, DWG# B010806 Page 71

Compact Backstop to Thriebeam Rail, DWG# B010724 Page 72

Compact Backstop to W-Beam Rail, DWG# B010728 Page 73

Transition to Median Barrier, DWG # B050606 Page 74

Transition to Concrete Block, DWG#AP070406 Page 75

Wide System to Bridge Pier with Concrete Barrier, DWG#AP070405 Page 76

Transition to Cylindrical Bridge Pier, DWG#AP070301 Page 77

Product & Installation: TAU-II™ Crash Cushion

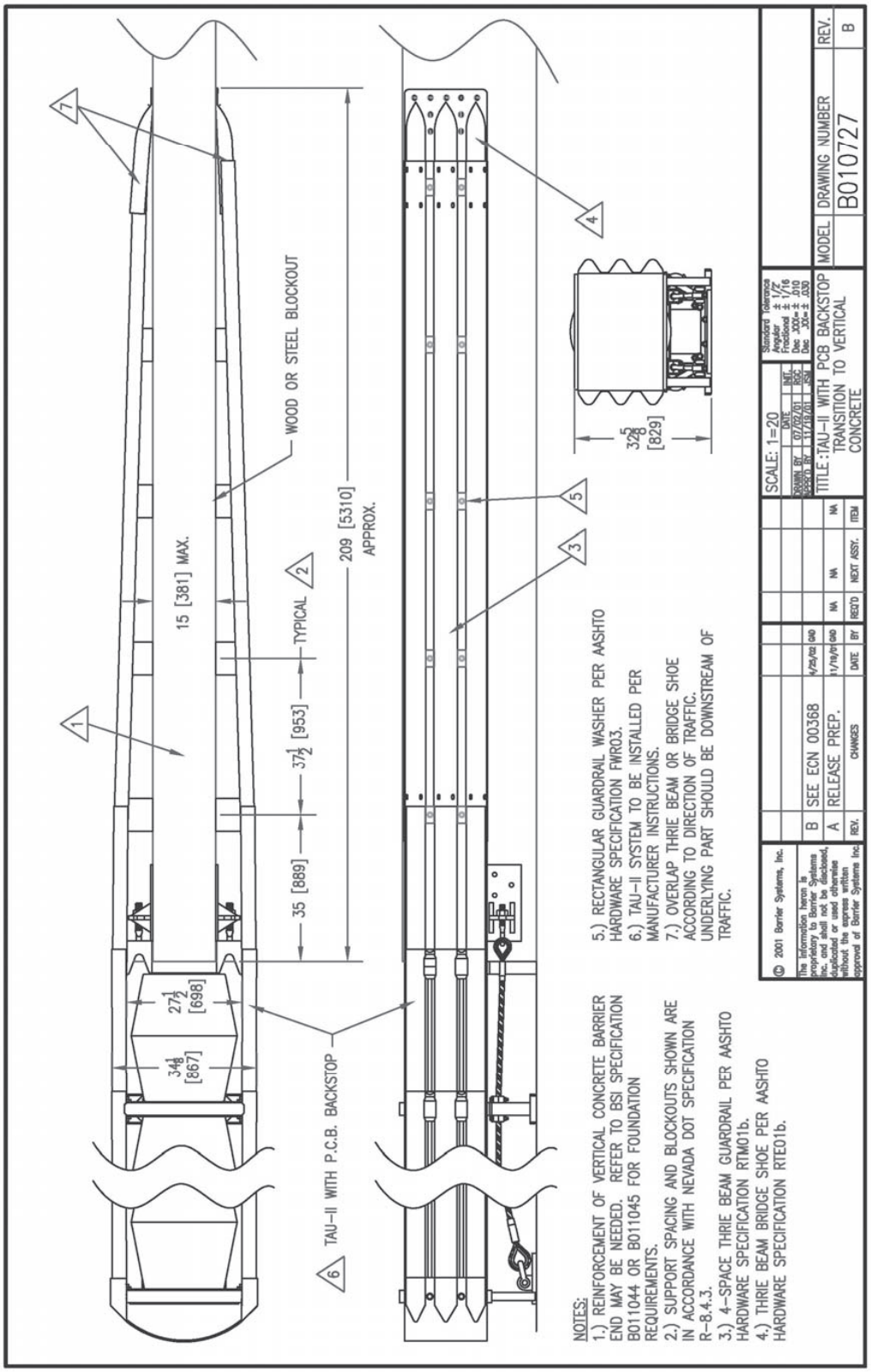

Product & Installation: TAU-II™ Crash Cushion

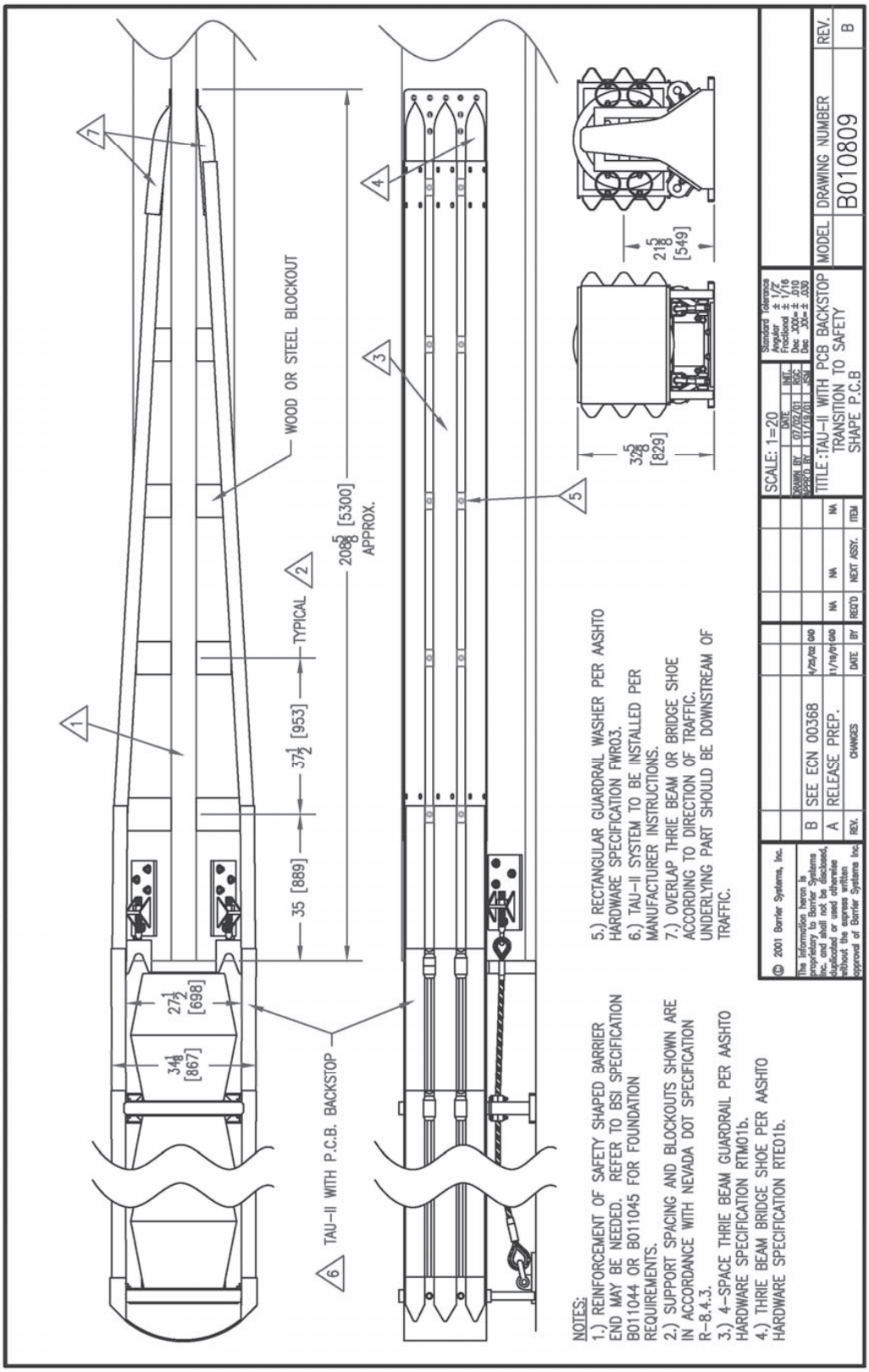

Product & Installation: TAU-II™ Crash Cushion

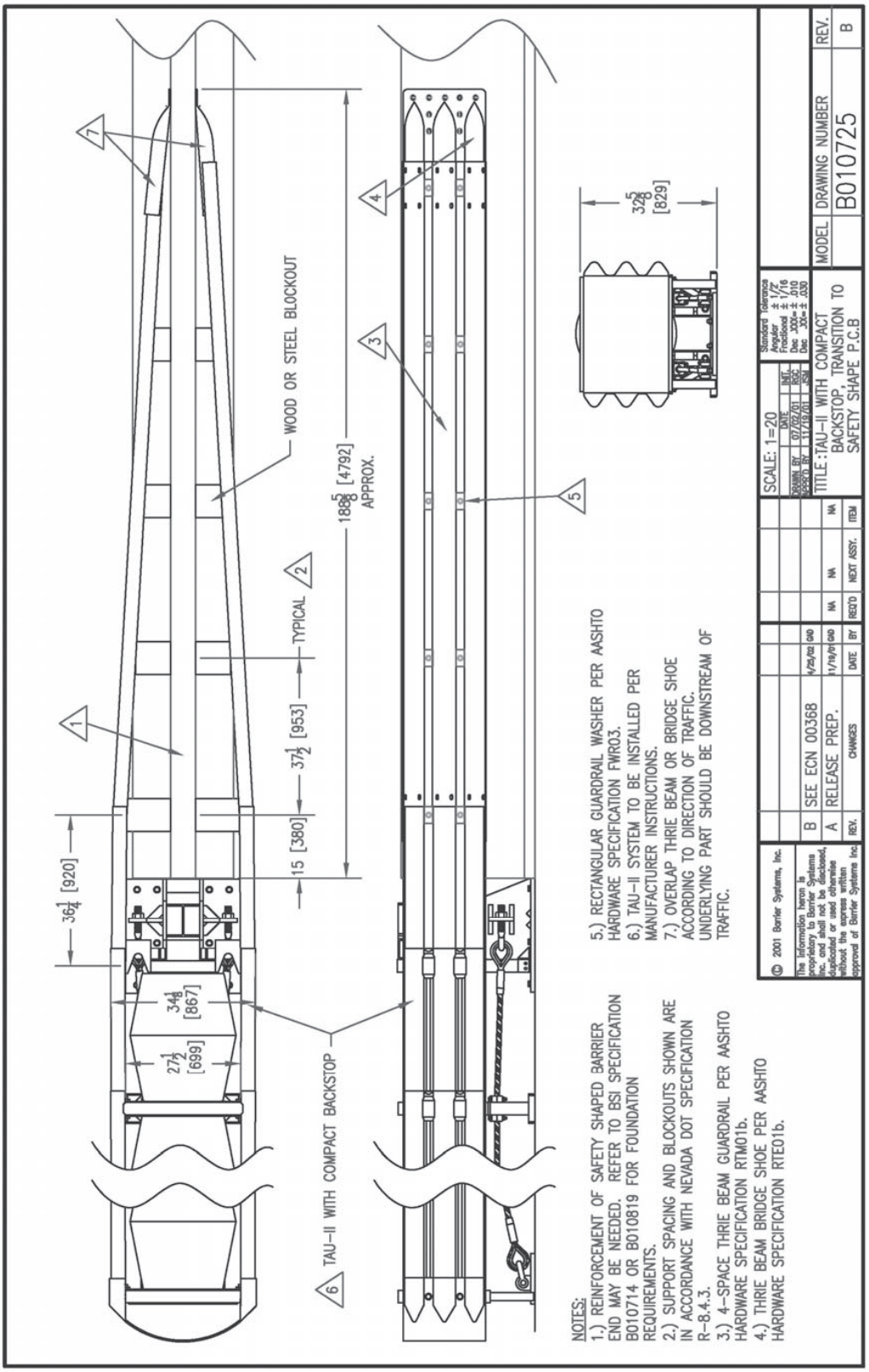

Product & Installation: TAU-II™ Crash Cushion

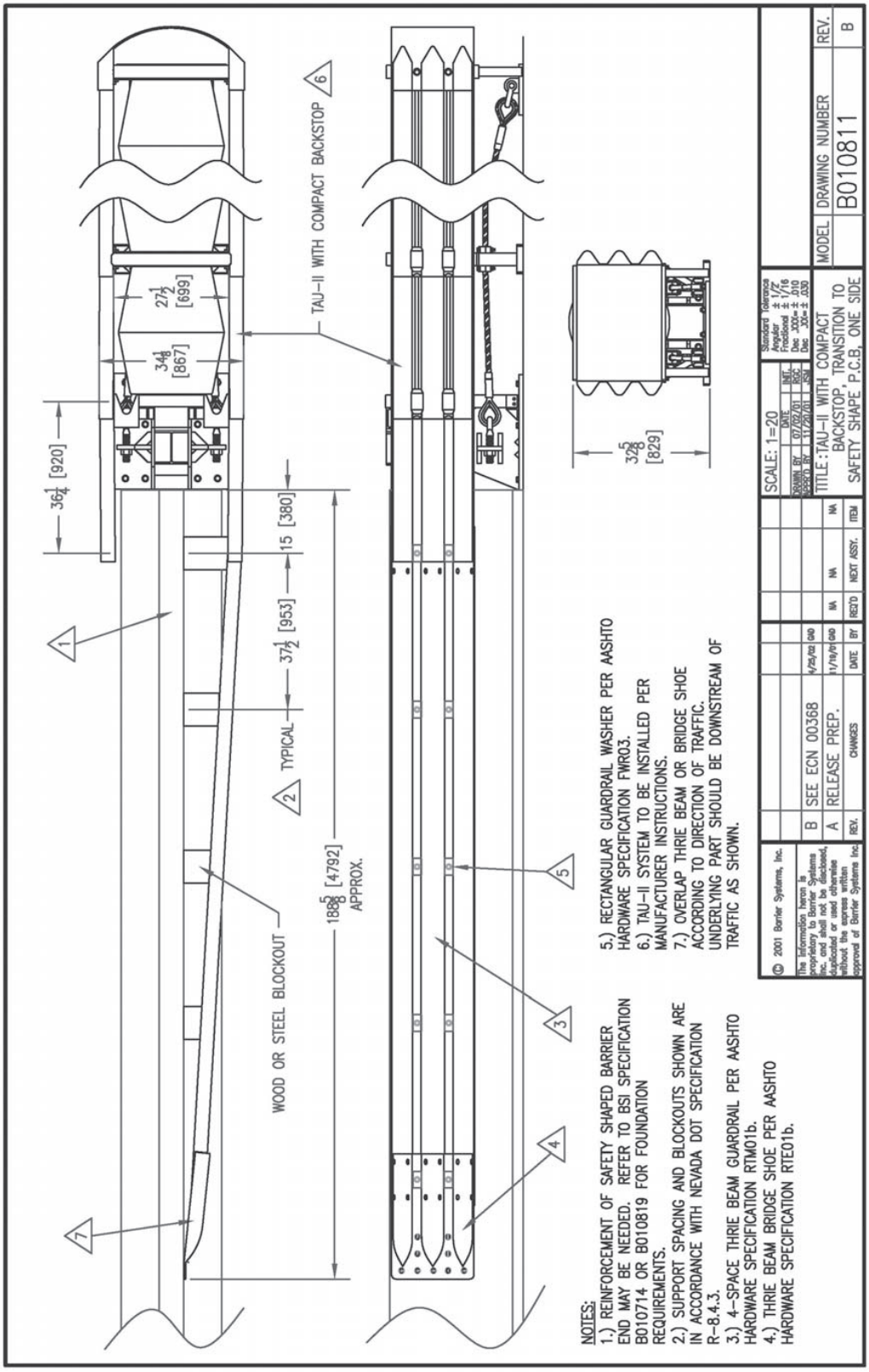

Product & Installation: TAU-II™ Crash Cushion

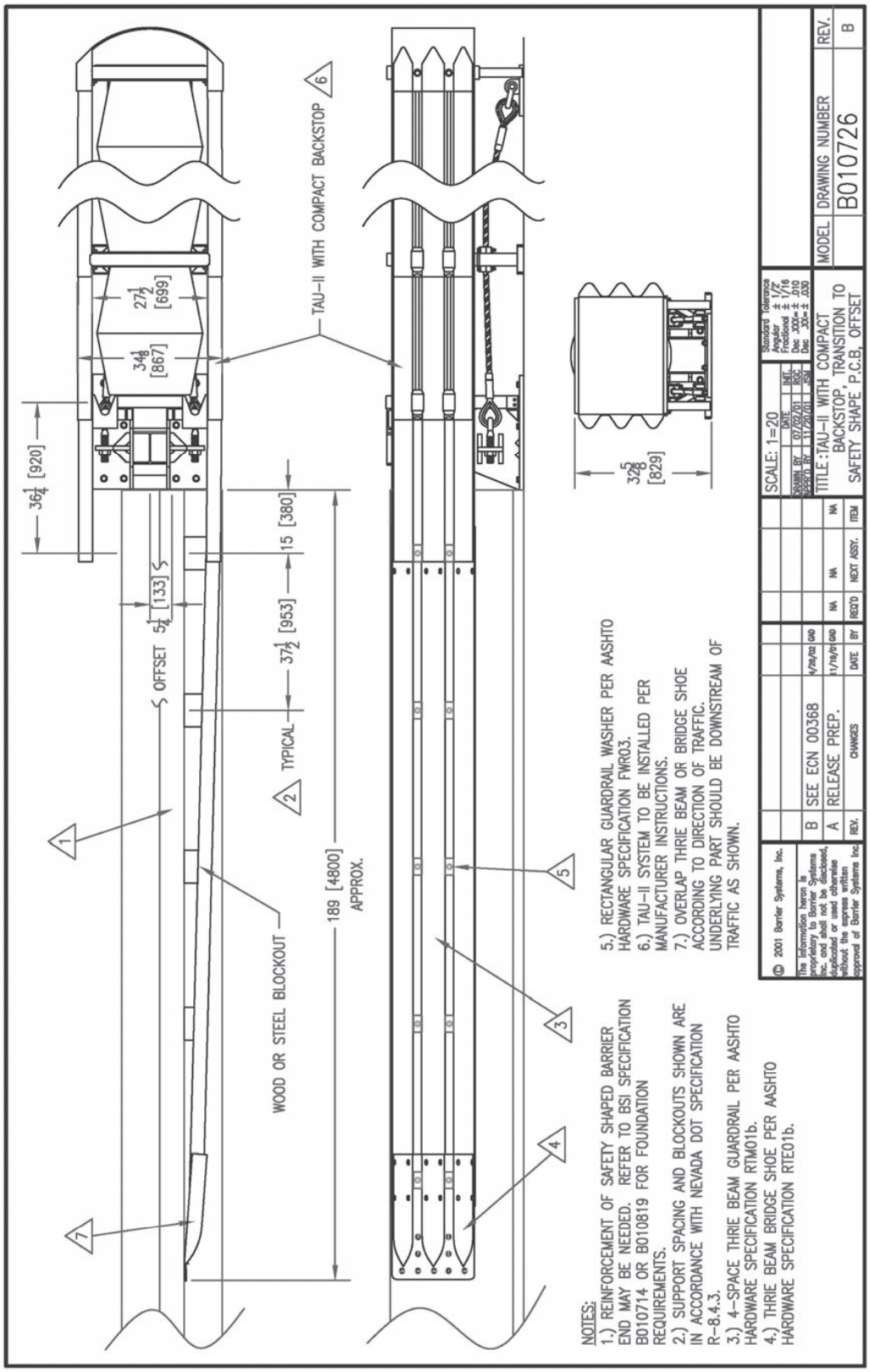

Product & Installation: TAU-II™ Crash Cushion

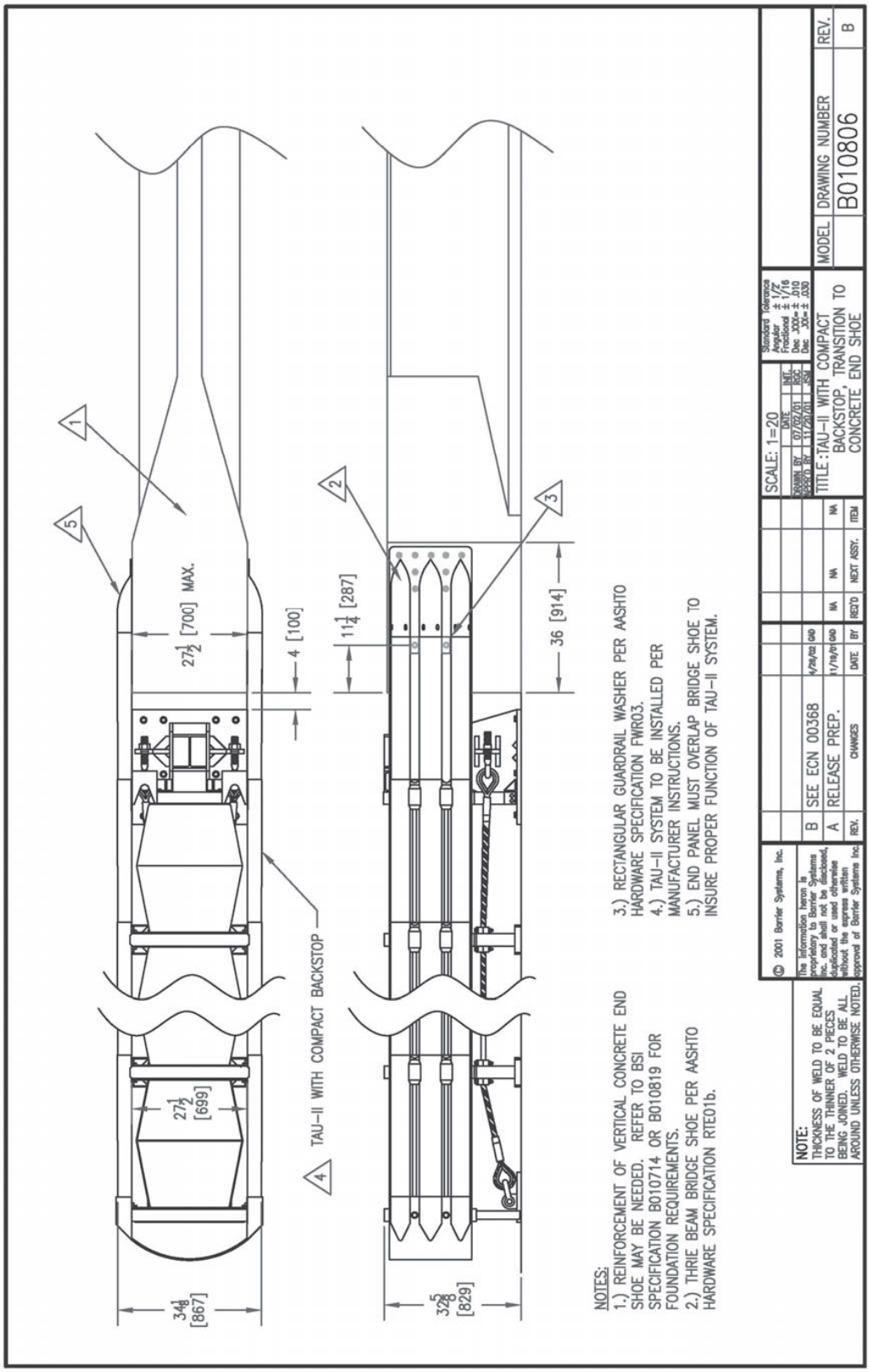

Product & Installation: TAU-II™ Crash Cushion

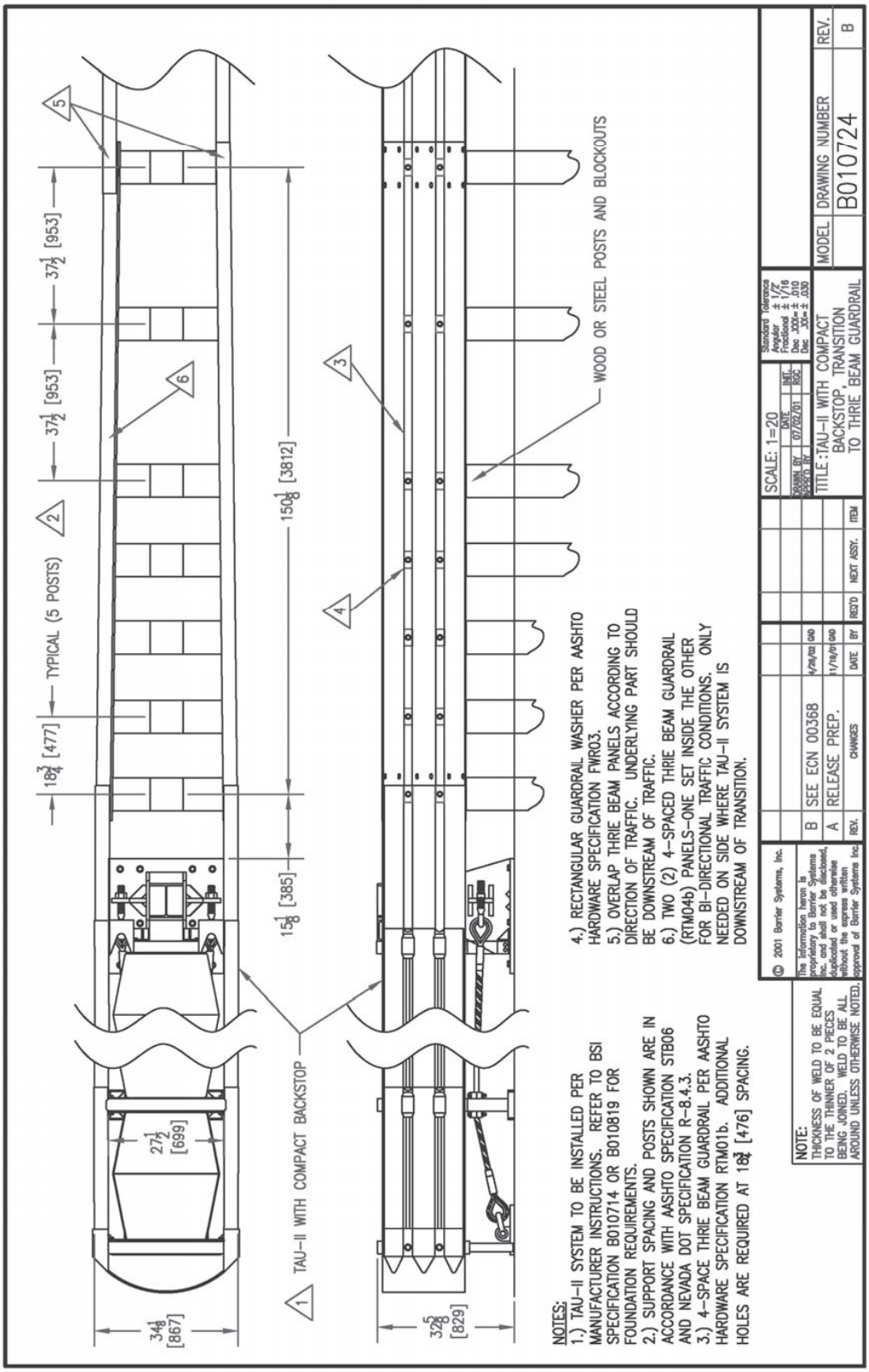

Product & Installation: TAU-II™ Crash Cushion

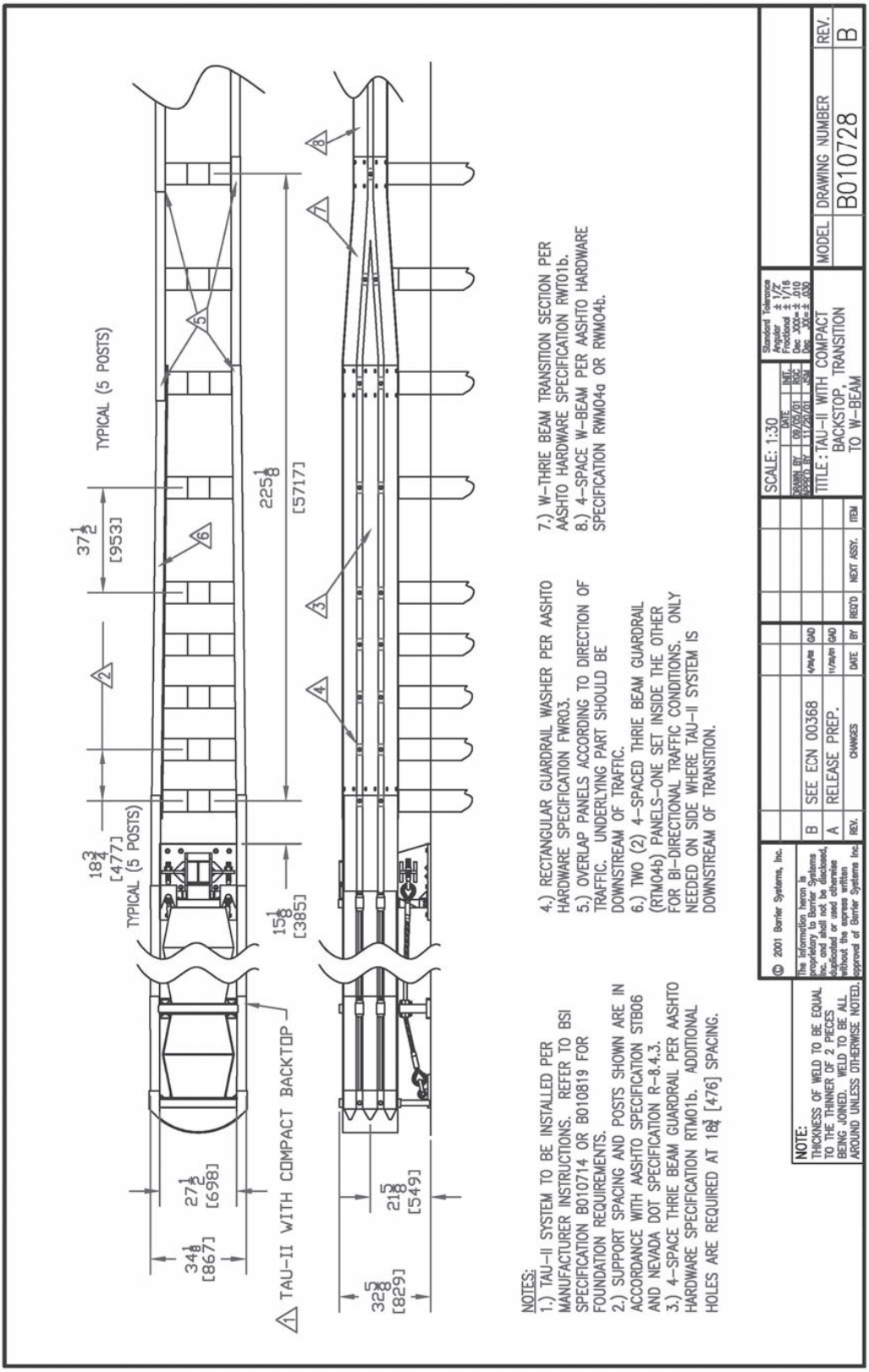

Product & Installation: TAU-II™ Crash Cushion

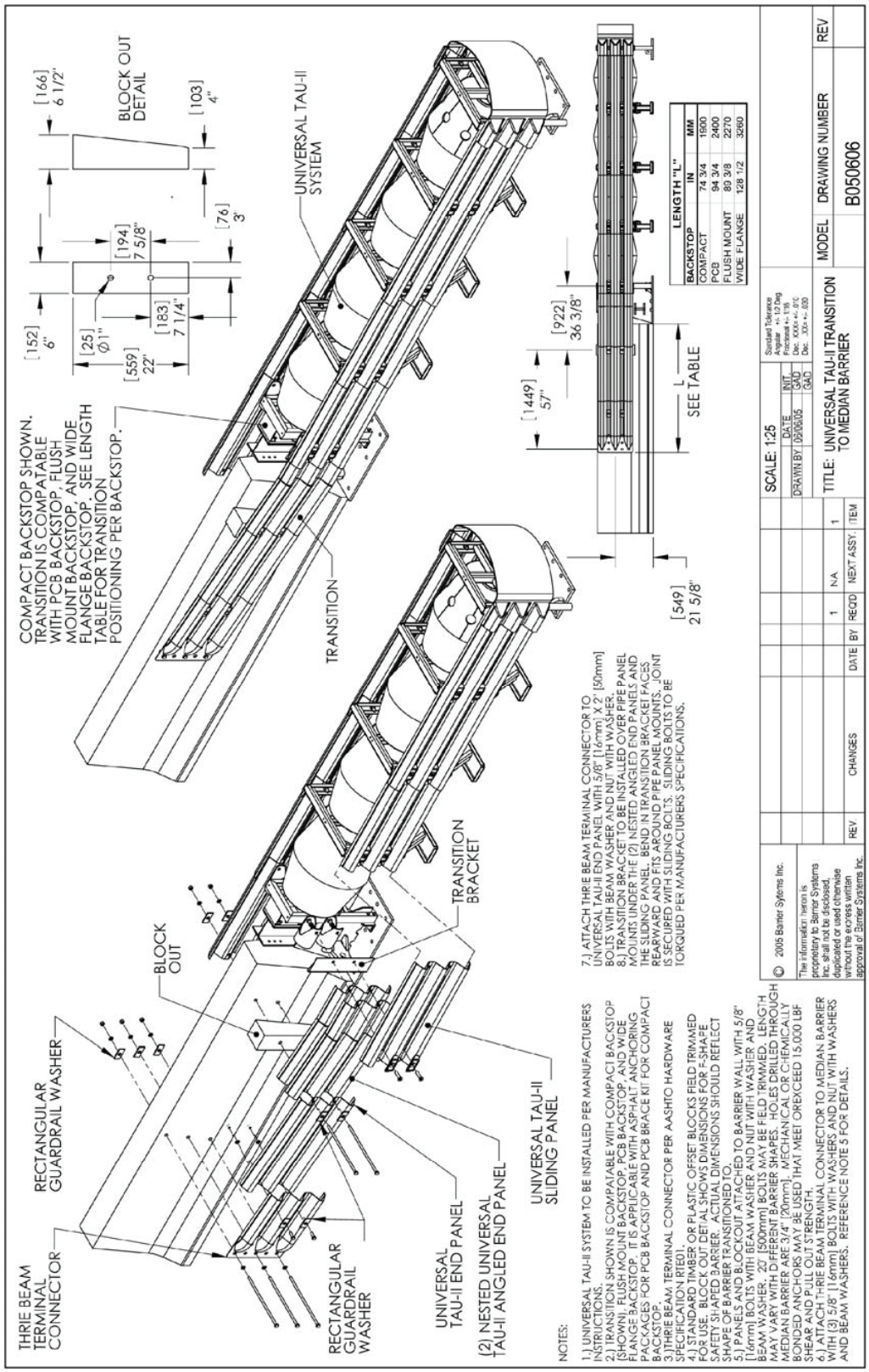

Product & Installation: TAU-II™ Crash Cushion

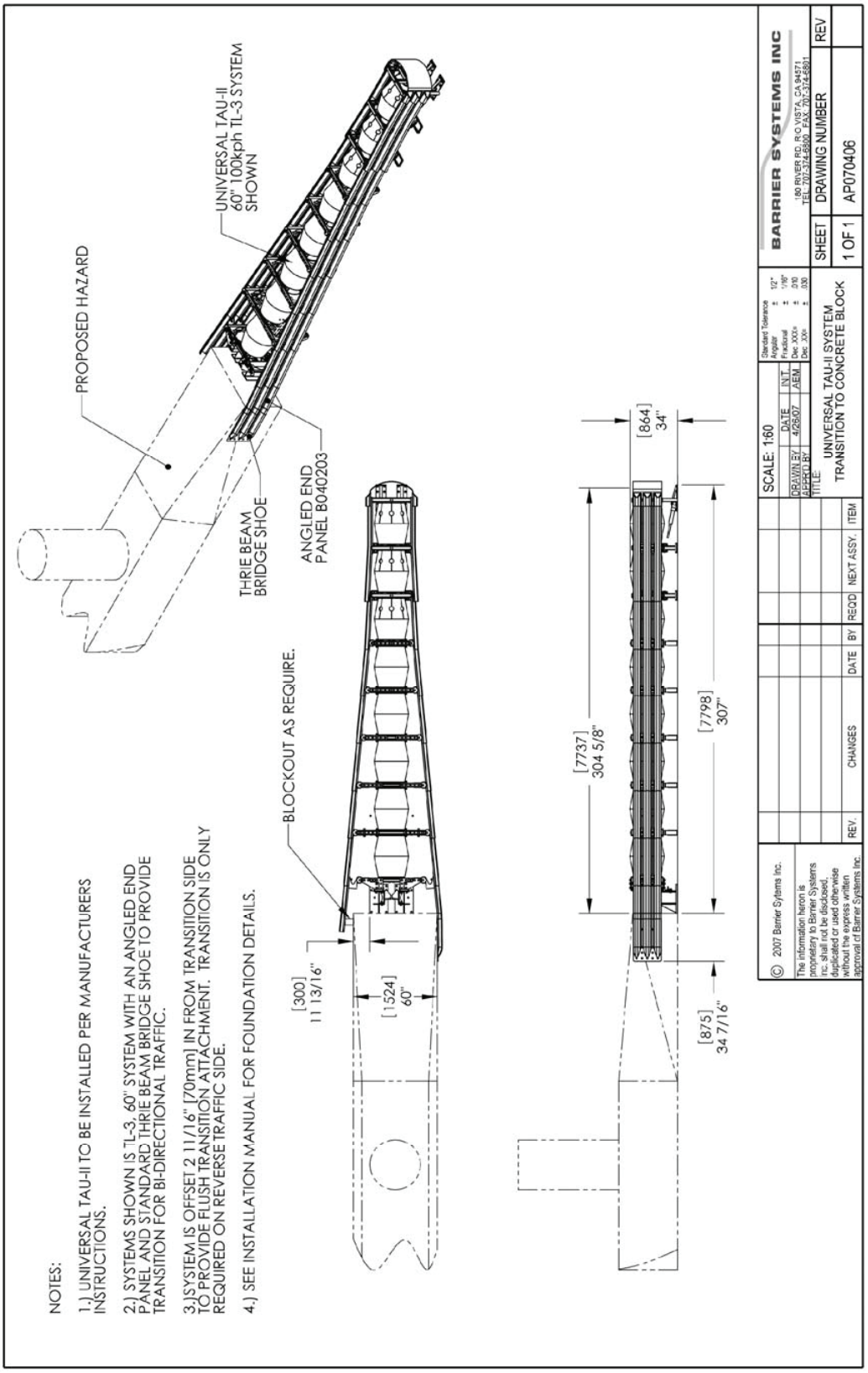

Product & Installation: TAU-II™ Crash Cushion

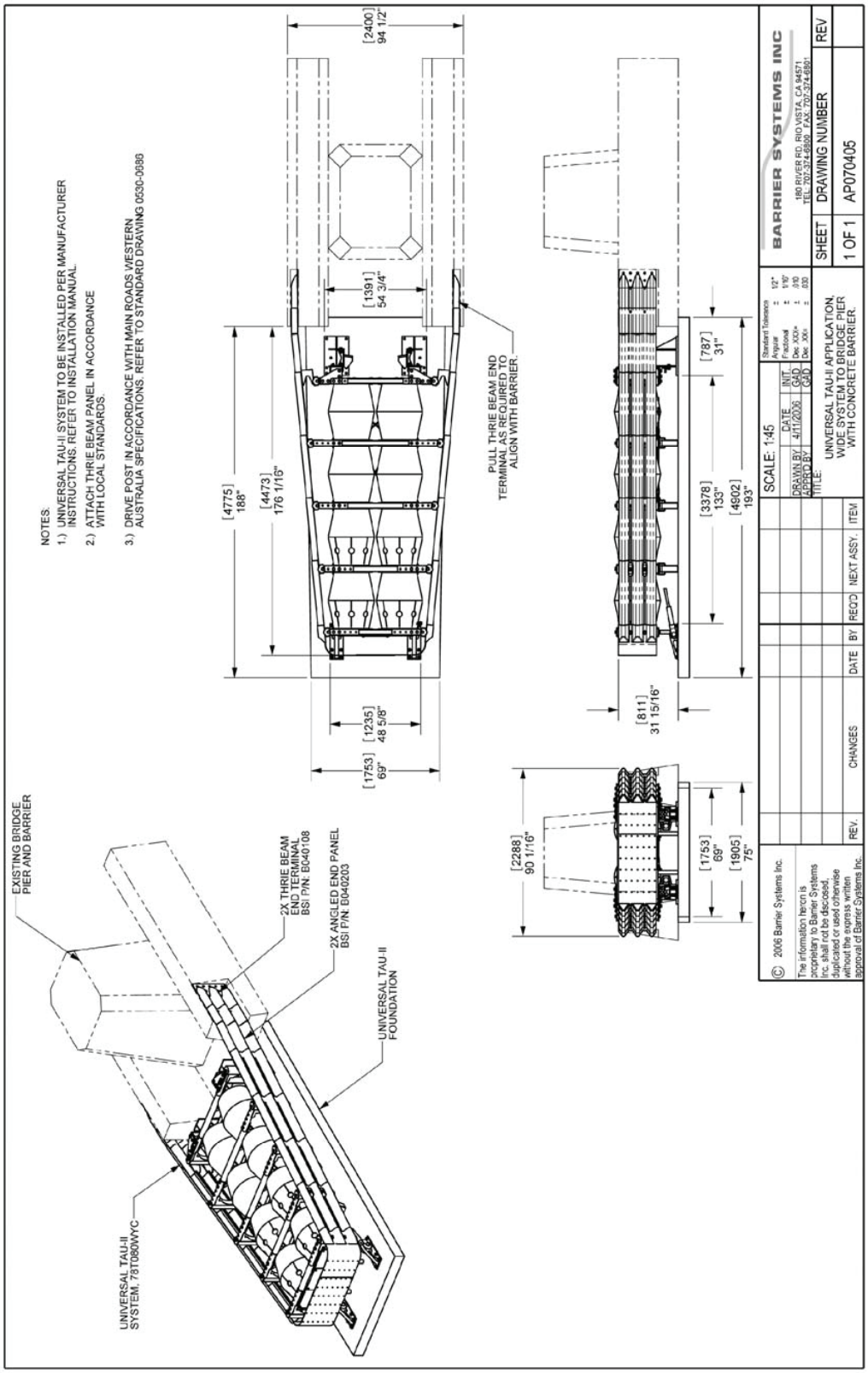

Product & Installation: TAU-II™ Crash Cushion

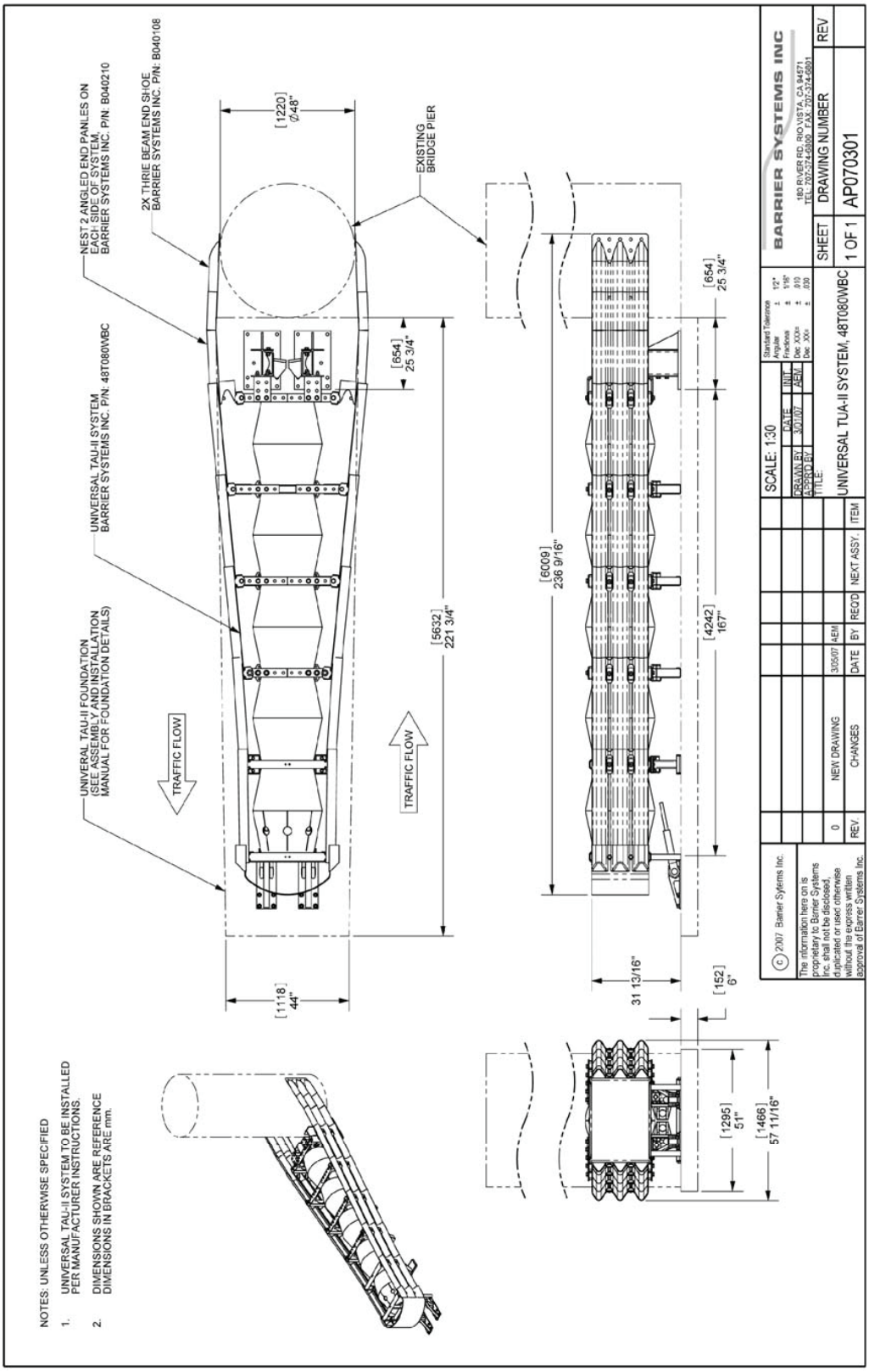

APPENDIX E - Universal TAU-II® Attachment to BarrierGuard 800™ Installation Guide

Refer to the Universal TAU-II® Installation and Maintenance Manual for more information, introduction, system overview, required tools, and other considerations for the Universal TAU-II® systems.

The Universal TAU-II® system is installed after the BarrierGuard 800 is fully deployed, installed, and anchored. Reference the BarrierGuard 800 Design, Installation, and Maintenance Manual for complete information on the BarrierGuard 800 barrier system implementation and installation.

The Universal TAU-II® system utilizes a monolithic backstop that bolts directly in place of the terminal cover of the BarrierGuard 800. The front cable anchor remains as the only foundation anchorage required for the Universal TAU-II® system. The front cable anchor is to be anchored to the same foundation type as the end of the BarrierGuard 800 that it is attached to (PC Concrete or Asphaltic Concrete). Anchorage shall be in accordance with specification A040113.

Installation Procedure: Each Procedure references a page number from the Universal TAU-II®

Installation Manual for further information –

1) Remove terminal cover from BarrierGuard 800 end section (if in place).
2) Install and fasten Universal TAU-II® BarrierGuard 800 Backstop in place. **(See diagram on next page)**.
3) Locate and position Front Cable anchor (see below). Drill and secure the appropriate anchors for the foundation used per BSI specification A040113. Use the Front Cable anchor as the drilling template. Use a BSI approved anchoring compound. See pages 14-16.
4) Place the Middle Bulkheads along the centerline of the system spaced approximately 865mm apart. See page 16.
5) Thread the guide Cables through the legs of the Middle Bulkheads, threaded end first, starting from the front of the system. Loosely place the threaded end into the backstop lugs and spin the nut on to hold it in place. See pages 16-18.
6) Pin the guide Cables to the Front Cable Anchor with the shackles. See page 14.
7) Install Cable Guides. See pages 17-19.
8) Attach Pipe Panel Mounts. See page 19.
9) Install the End Panels and first Slider Panels starting at the Pipe Panel Mounts. If a transition is to be installed the End Panel will be replaced by the Angled End Panel. See page 20 & 77.
10) Install Slider Panels. Start from the back of the system and move forward, overlapping the rearward panel. Secure the panels in place with the Slider Bolts. See pages 20-22.

Product & Installation: TAU-II™ Crash Cushion

11) Install the Front Support, attach the Slider Panels, Nose Cover, and Leg Supports and connect to the first Middle Support with Slider Bolts. See page 23.

12) Torque Slider Bolts and Front Panel Bolts and install Energy Absorbing Cartridges. See page 24.

13) Apply tension to cables – Torque to specification. Ensure foundation anchors are properly cured. See page 25.

(See Installation Diagram on Next Page)

Product & Installation: TAU-II™ Crash Cushion

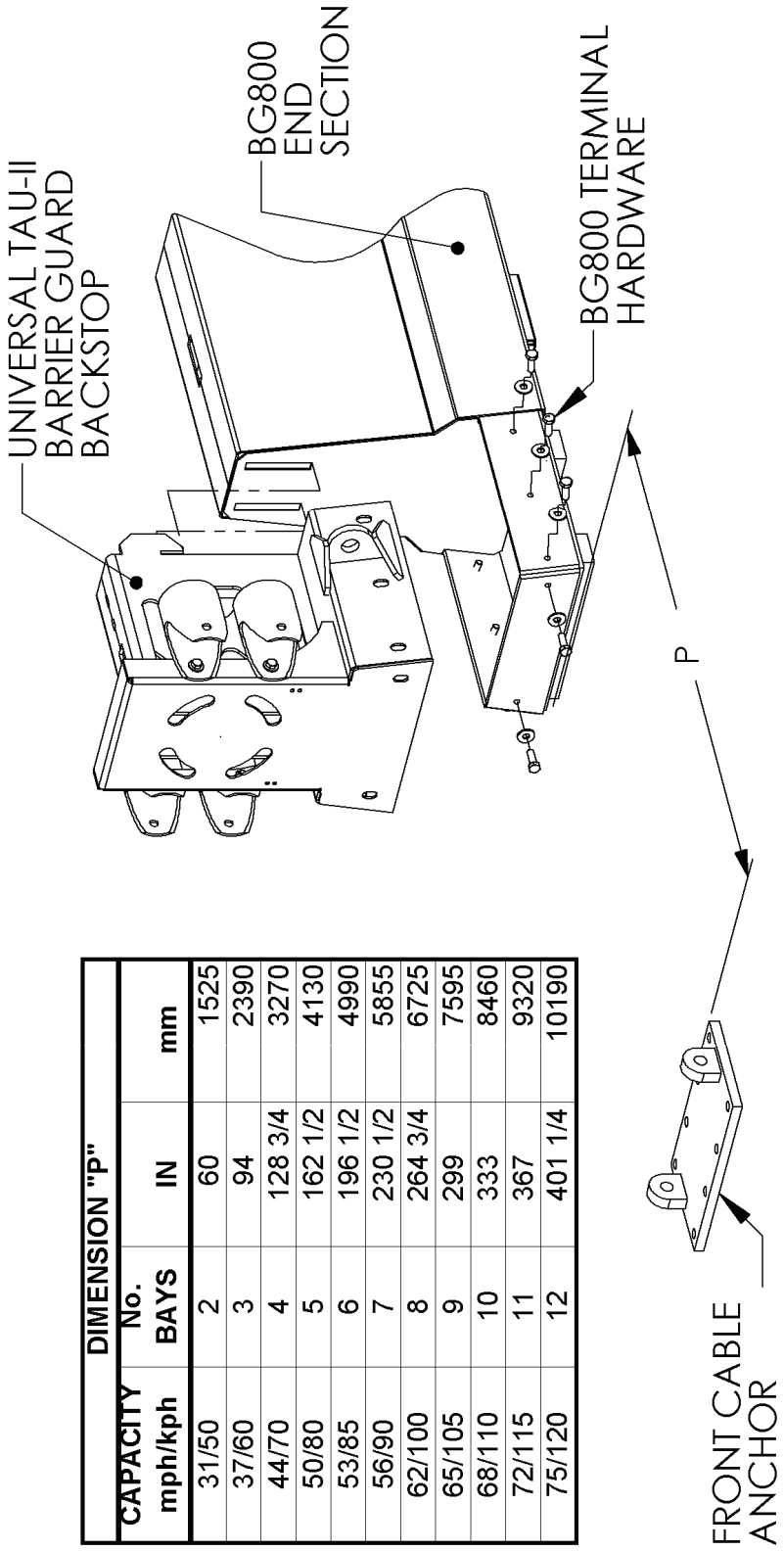

CAPACITY mph/kph	DIMENSION "P" No. BAYS	IN	mm
31/50	2	60	1525
37/60	3	94	2390
44/70	4	128 3/4	3270
50/80	5	162 1/2	4130
53/85	6	196 1/2	4990
56/90	7	230 1/2	5855
62/100	8	264 3/4	6725
65/105	9	299	7595
68/110	10	333	8460
72/115	11	367	9320
75/120	12	401 1/4	10190